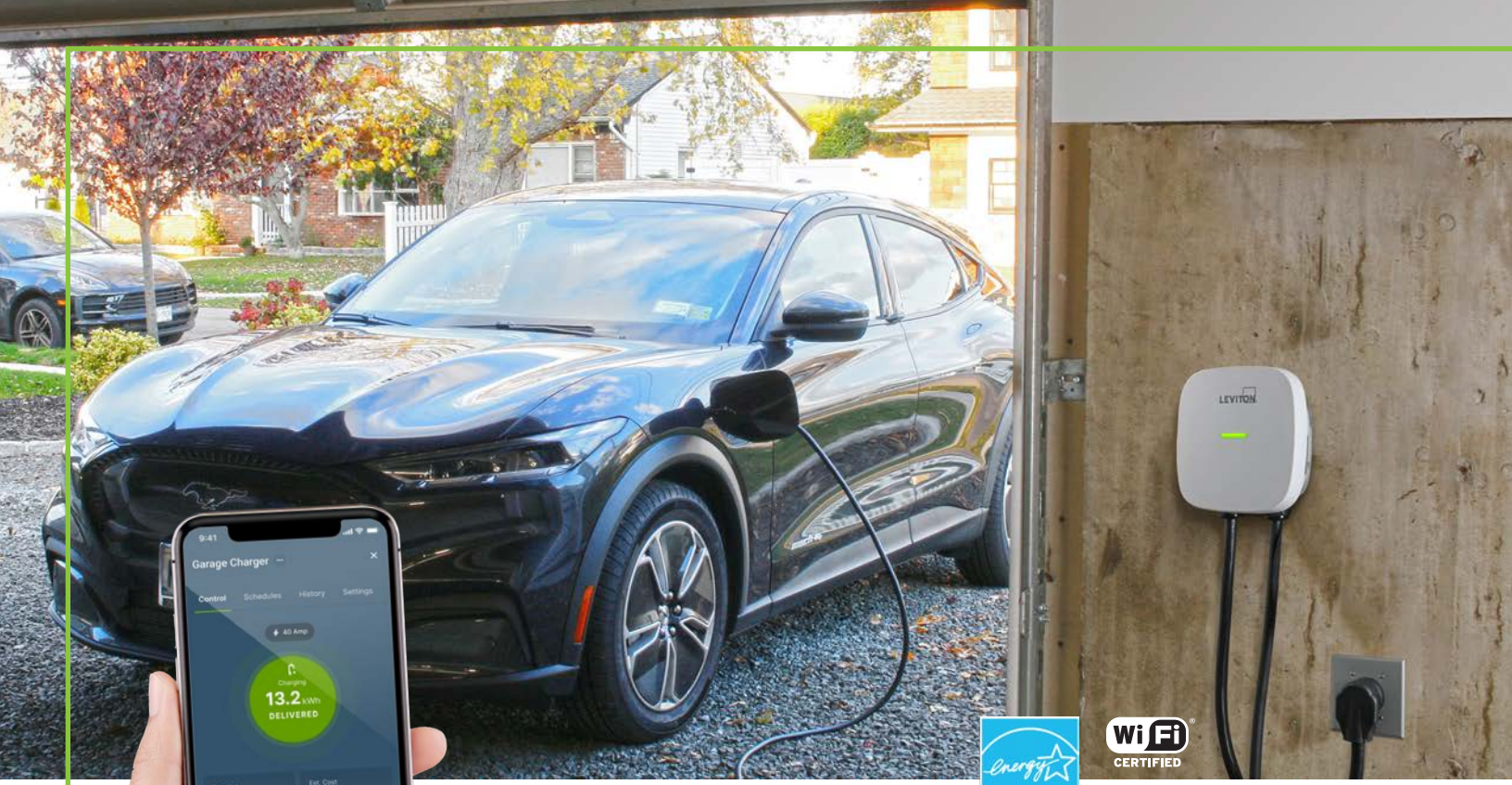

ENERGY STAR

Wi Fi CERTIFIED

EV Series

Residential Electric Vehicle Charging Solutions

works with my leviton

Works with Samsung SmartThings

LEVITON®

A smart solution for every room in your home, including your garage!

Leviton is proud to be a pioneer in the electric vehicle supply equipment (EVSE) industry, providing charging solutions for over a decade while keeping up with the latest technology. My Leviton enabled solutions offer a full portfolio of connected devices so any home, new or old, can be a smart home.

Flexible Control

Manage your whole smart home with the My Leviton App

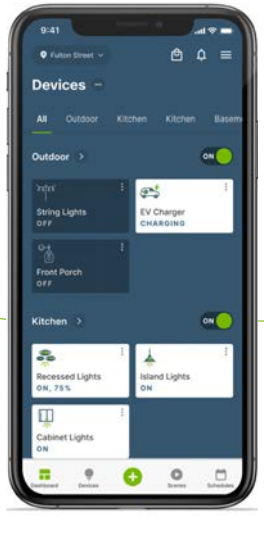

View all smart devices on one dashboard

View charging status and remotely start/stop

Schedule charging sessions during off-peak utility hours to save on electricity costs

Speed

Charge ANY electric vehicle faster!

What is the difference between a Leviton **Level 2** charging station and the **Level 1** charging station I received with my vehicle?

LEVEL 1

Averages ~5 miles of range per 1 hour of charging.*

- Typically provided with an EV purchase, using a J1772 connector
- Rated 120 Volts and can be plugged into a standard NEMA 5-15 household outlet

LEVEL 2

Averages ~25 miles of range per 1 hour of charging.*

- The most common type of charging stations in the U.S. and North America, using a J1772 connector
- Rated 240 Volts, are often hardwired, and charge faster than Level 1

With an industry standard SAE J1772 cable, the EV Series can charge any EV, including Audi, BMW, Ford, Honda, Subaru, and even Tesla using Leviton NACS Adapter (Part Number: NACSA)

As per the AFDC.Energy.Gov as of May 2024 - Charging time may vary depending on the vehicle and battery capacity. Please visit the documents section on leviton.com/evcharging for more information.

LEVEL 2
EV CHARGING

Rebates & Incentives

Stay up to date on the latest rebates & incentives in your area

Get money back for your station!

There are many Federal and State incentives being offered to promote the widespread adoption of electric and other alternative fuel vehicles, including tax breaks, reduced utility rates and more.

Depending on your location, you can get up to **100% off** your charging station!

Ordering Information

EV Series Standard

EV320
EV480
EV800

No App Capabilities

EV Series Smart Home

EV32W
EV40P
EV48W
EV80W

	EV320 / EV32W	EV40P	EV480 / EV48W	EV800 / EV80W
Amperage	32 A	40 A*	48 A	80 A
Breaker	40 A	50 A	60 A	100 A
Voltage	208/240 VAC			
Charge Connector Cord	SAE J1772			
Charging Cable Length	18 ft. (5.5 m)	25 ft (7.6 m)	18 ft. (5.5 m)	
Hardwire/Plug-In	Hardwire	Plug-In	Hardwire	
Station Operating Temp.	-22 °F to 122 °F (-30 °C to 50 °C)			
Enclosure Rating	NEMA Type 3R for both Indoor/Outdoor Use			
Standards & Certification	UL2594, UL 2231-1, UL 2231-2, UL 2251, UL 62, UL 991, UL 1998, NFPA 70 Article 625, UL840, CSA Std. C22.2#280			
Access Control	All stations come with optional access control via RFID cards			
Warranty	2-Year Limited			

*Adjustable from 16 A - 40 A

Dimensions

Hardwired Stations

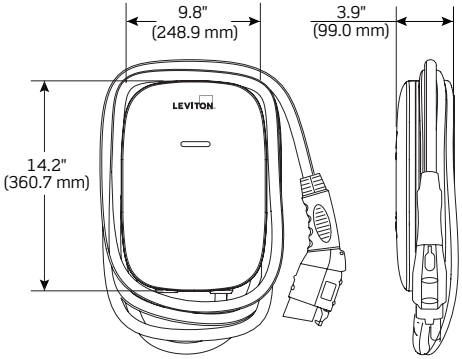

Plug-In Stations

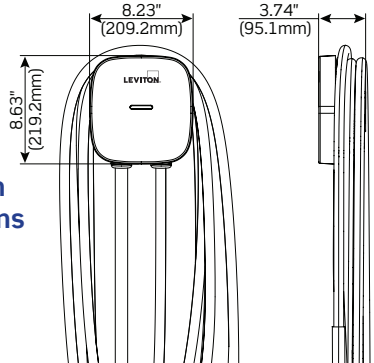

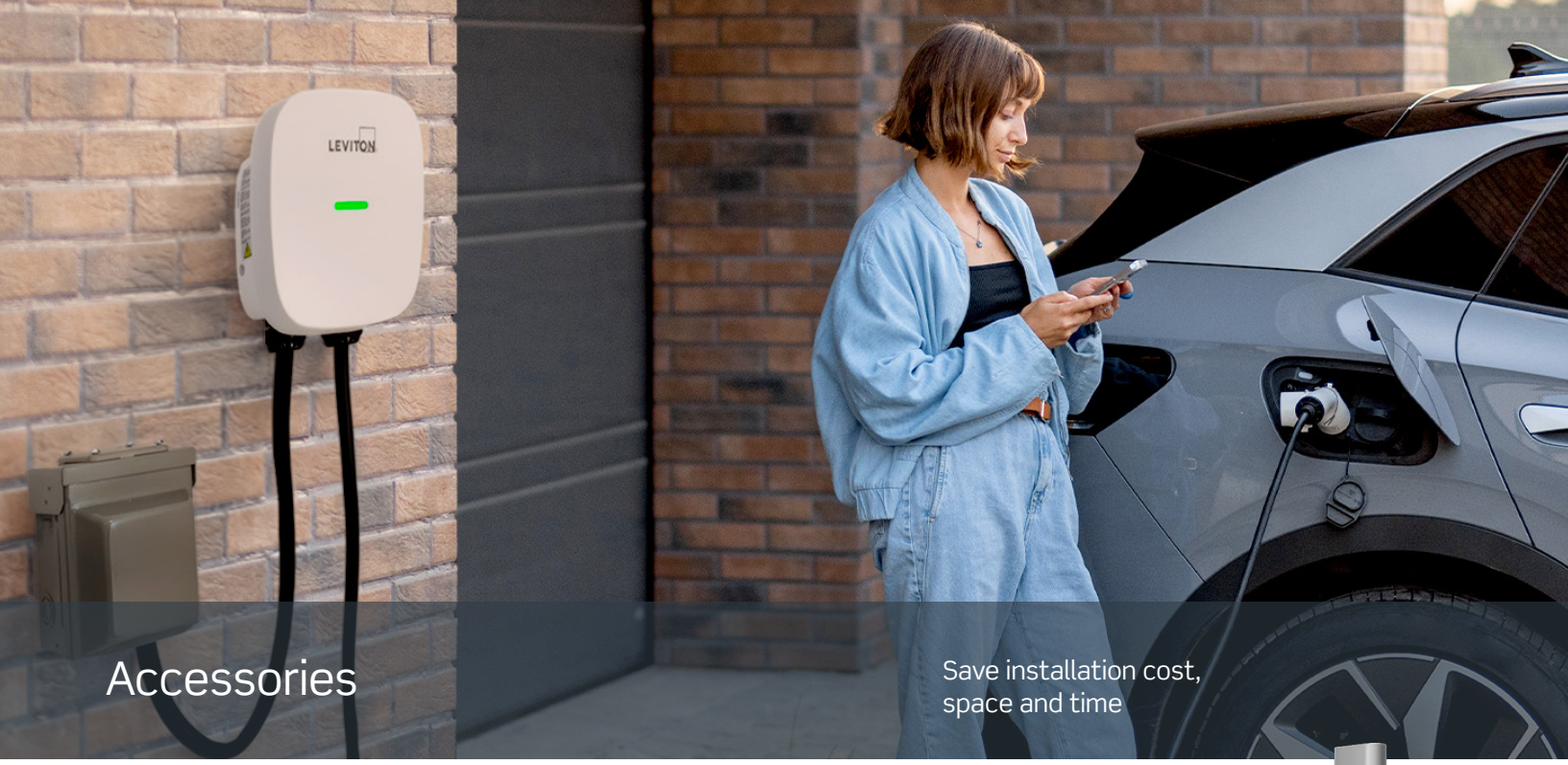

Accessories

Save installation cost, space and time

NEMA 14-50R EV Charging Heavy Duty Single Receptacles*

EV Grade	1450R
EV Grade, Weather-Resistant	1450W**
EV Grade, Weather-Resistant, Pre-assembled in Outdoor Weatherproof Metal Cover, Surface Mount	EVCVM-50
EV Grade, Weather-Resistant with Outdoor Weatherproof While-In-Use Clear Cover, Flush Mount	EVCVP-50***

*For use only with plug-in EV charging station (Leviton EV40P)

**Must be installed in a 2-gang outdoor box and must use code compliant weatherproof cover

***Must be installed in a 2-gang outdoor box

Single or Dual Mount Pedestals

Single Mount	EPED1
Dual Mount, Front/Back	EPED2
Wall Hook	EHOOK

SAFE **EV CHARGING** FROM THE BRAND YOU TRUST

Leviton Manufacturing Co., Inc.
Tech Line: 1-800-824-3005
Mon-Fri 8am-10pm EST, Saturday 9am-7pm EST, Sunday 9am-5pm EST
For 24/7 product support visit **www.leviton.com/support**

Visit our Website at: www.leviton.com/evcharging

© 2026 Leviton Manufacturing Co., Inc. All rights reserved.
All trademarks are the property of their respective owners.

Q-1474F