DAIKIN

DX13SN

COOLING CAPACITY: 17,000 - 57,000 BTU/H

ENERGY-EFFICIENT SPLIT SYSTEM AIR CONDITIONER UP TO 14 SEER / 11.5 EER

Contents

Nomenclature 2
Product Specifications 3
Expanded Cooling Data 4
AHRI Ratings 22
Dimensions 46
Wiring Diagrams 47
Accessories 50

■ *Standard Features*

- Energy-efficient compressor
- Single-speed PSC condenser fan motor
- Factory-installed filter drier
- Copper tube/aluminum fin coil
- Service valves with sweat connections and easy-access gauge ports
- AHRI Certified; ETL Listed

■ *Cabinet Features*

- Heavy-gauge galvanized-steel cabinet with louvered sound control top
- Steel louver coil guard
- Custom Nickel Gray powder-paint finish
- 500-hour salt-spray tested
- Top and side maintenance access
- Single-panel access to controls with space provided for field-installed accessories
- When properly anchored, meets the 2010 Florida Building Code unit integrity requirements for hurricane-type winds (Anchor bracket kits available.)

* Complete warranty details available from your local dealer or at www.daikincomfort.com. To receive the 12-Year Parts Limited Warranty, online registration must be completed within 60 days of installation. Online registration and some of the additional requirements are not required in California or Quebec.

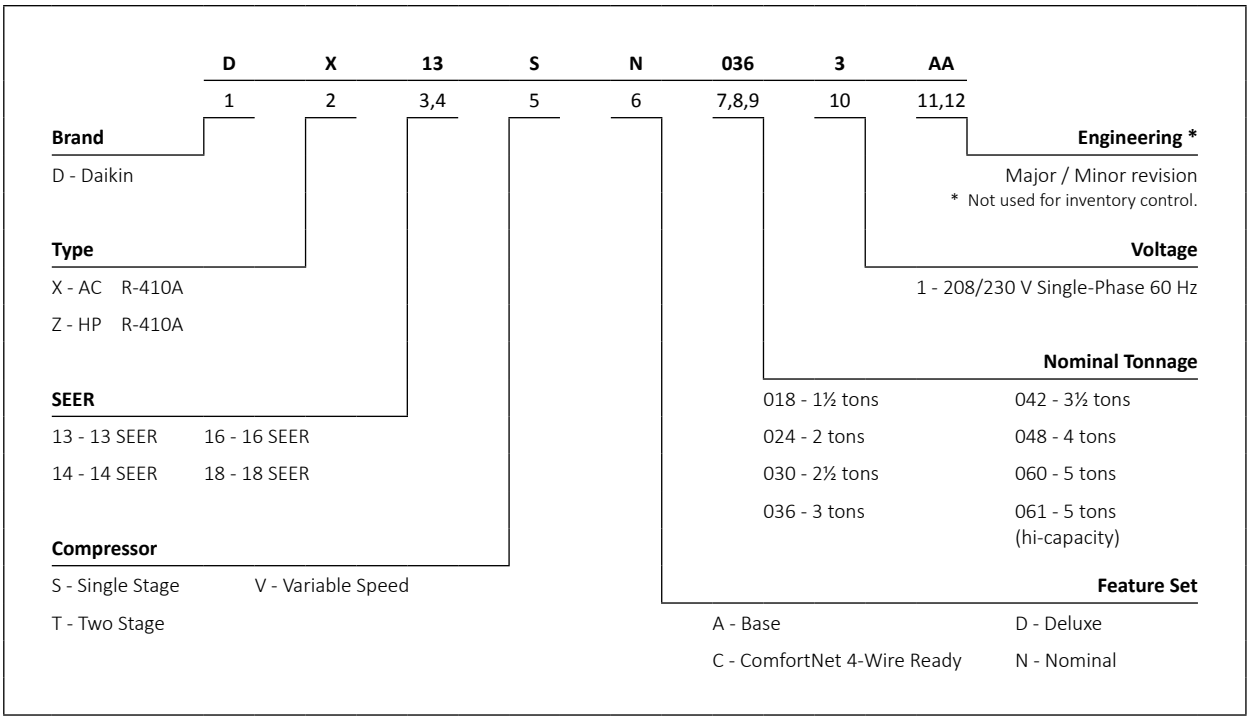
D X 13 S N 036 3 AA
1 2 3,4 5 6 7,8,9 10 11,12
Brand
D - Daikin
Type
X - AC R-410A
Z - HP R-410A
SEER
13 - 13 SEER
14 - 14 SEER
16 - 16 SEER
18 - 18 SEER
Compressor
S - Single Stage
T - Two Stage
V - Variable Speed
Feature Set
A - Base
C - ComfortNet 4-Wire Ready
D - Deluxe
N - Nominal
Nominal Tonnage
018 - 1½ tons
024 - 2 tons
030 - 2½ tons
036 - 3 tons
042 - 3½ tons
048 - 4 tons
060 - 5 tons
061 - 5 tons (hi-capacity)
Voltage
1 - 208/230 V Single-Phase 60 Hz
Engineering *
Major / Minor revision
* Not used for inventory control.

	DX13SN 0181A*	DX13SN 0241A*	DX13SN 0241B*	DX13SN 0301A*	DX13SN 0361A*	DX13SN 0421A*	DX13SN 0481A*	DX13SN 0601A*	DX13SN 0611A*
CAPACITIES									
Nominal Cooling (BTU/h)	18,000	24,000	23,000	28,400	33,600	40,000	46,000	57,000	56,500
Decibels	75	71	75	73	74	75	76	77	77
COMPRESSOR									
RLA	9.0	13.5	7.7	12.8	14.1	17.9	19.9	25.0	26.4
LRA	48	58.3	37	64	77	112	109	134	134
CONDENSER FAN MOTOR									
Horsepower	1/8	1/8	1/8	1/8	1/4	1/4	1/4	1/4	1/4
FLA	0.7	0.7	0.65	0.65	1.2	1.2	1.2	1.2	1.3
REFRIGERATION SYSTEM									
Refrigerant Line Size									
Liquid Line Size ("O.D.)	⅜"	⅜"	⅜"	⅜"	⅜"	⅜"	⅜"	⅜"	⅜"
Suction Line Size ("O.D.)	¾"	¾"	¾"	¾"	⅞"	1⅛"	1⅛"	1⅛"	1⅛"
Refrigerant Connection Size									
Liquid Valve Size ("O.D.)	⅜"	⅜"	⅜"	⅜"	⅜"	⅜"	⅜"	⅜"	⅜"
Suction Valve Size ("O.D.) [4] [5]	¾"	¾"	¾"	¾"	¾" [4]	⅞" [5]	⅞" [5]	⅞" [5]	⅞" [5]
Valve Type	Sweat	Sweat	Sweat	Sweat	Sweat	Sweat	Sweat	Sweat	Sweat
Refrigerant Charge (oz.)	69	64	60	60	62	80	91	94	111
Shipped with Orifice Size (in.)	0.051	0.055	0.055	0.061	0.070	0.076	0.080	0.086	0.086
ELECTRICAL DATA									
Voltage/ Phase (60 Hz)	208-230/ 1	208-230/ 1	208-230/ 1	208-230/ 1	208-230/ 1	208-230/ 1	208-230/ 1	208-230/ 1	208-230/ 1
Minimum Circuit Ampacity [2]	12	17.6	10.3	16.7	18.8	23.6	26.1	32.5	34.3
Max. Overcurrent Protection [3]	20 amps	30 amps	15 amps	25 amps	30 amps	40 amps	45 amps	50 amps	60 amps
Min / Max Volts	197/253	197/253	197/253	197/253	197/253	197/253	197/253	197/253	197/253
Electrical Conduit Size	½" or ¾"	½" or ¾"	½" or ¾"	½" or ¾"	½" or ¾"	½" or ¾"	½" or ¾"	½" or ¾"	½" or ¾"
SHIP WEIGHT (LBS)	117	120	120	132	135	189	193	202	233

[1] Line sizes denoted for 25' line sets, tested and rated in accordance with AHRI Standard 210/240. For other line-set lengths or sizes, refer to the installation & Operating instructions and/or the long line-set guidelines.

[2] Wire size should be determined in accordance with National Electrical Codes; extensive wire runs will require larger wire sizes

[3] Must use time-delay fuses or HACR-type circuit breakers of the same size as noted.

[4] Installer will need to supply ¾" to ⅞" adapters for suction line connections.

[5] Installer will need to supply ⅞" to 1⅛" adapters for suction line connections.

NOTES

- Always check the S&R plate for electrical data on the unit being installed.
- Unit is charged with refrigerant for 15' of ⅜" liquid line. System charge must be adjusted per Installation Instructions Final Charge Procedure.

			Outdoor Ambient Temperature																							
			65ºF				75ºF				85ºF				95ºF				105ºF				115ºF			
			Entering Indoor Wet Bulb Temperature																							
IDB	Airflow		59	63	67	71	59	63	67	71	59	63	67	71	59	63	67	71	59	63	67	71	59	63	67	71
70	525	MBh	15.6	16.2	17.7	-	15.3	15.8	17.3	-	14.9	15.4	16.9	-	14.5	15.1	16.5	-	13.8	14.3	15.7	-	12.8	13.3	14.5	-
		S/T	0.72	0.60	0.41	-	0.74	0.62	0.43	-	0.76	0.64	0.44	-	0.79	0.66	0.45	-	0.82	0.68	0.47	-	0.82	0.69	0.48	-
		Δ T	20	17	13	-	20	17	13	-	20	17	13	-	20	17	13	-	20	17	13	-	18	16	12	-
		kW	1.26	1.28	1.32	-	1.34	1.37	1.41	-	1.42	1.44	1.49	-	1.48	1.51	1.56	-	1.54	1.57	1.62	-	1.59	1.62	1.67	-
		Amps	4.6	4.7	4.8	-	4.9	5.1	5.2	-	5.4	5.5	5.7	-	5.7	5.8	6.0	-	6.1	6.2	6.4	-	6.4	6.6	6.8	-
		Hi PR	216	232	245	-	242	260	275	-	275	296	313	-	313	337	356	-	353	379	401	-	390	419	443	-
		Lo PR	102	108	118	-	107	114	125	-	112	119	130	-	117	125	136	-	123	131	143	-	127	135	148	-
	650	MBh	16.9	17.6	19.2	-	16.5	17.1	18.8	-	16.1	16.7	18.3	-	15.8	16.3	17.9	-	15.0	15.5	17.0	-	13.9	14.4	15.7	-
		S/T	0.74	0.62	0.43	-	0.77	0.64	0.45	-	0.79	0.66	0.46	-	0.81	0.68	0.47	-	0.85	0.71	0.49	-	0.85	0.71	0.49	-
		Δ T	18	15	12	-	18	16	12	-	18	16	12	-	18	16	12	-	18	15	12	-	17	14	11	-
		kW	1.28	1.31	1.34	-	1.37	1.40	1.44	-	1.45	1.48	1.52	-	1.52	1.55	1.59	-	1.57	1.61	1.66	-	1.62	1.66	1.71	-
		Amps	4.7	4.8	5.0	-	5.1	5.2	5.4	-	5.5	5.6	5.8	-	5.9	6.0	6.2	-	6.2	6.4	6.6	-	6.6	6.8	7.0	-
		Hi PR	222	239	253	-	249	268	283	-	284	305	322	-	323	348	367	-	363	391	413	-	402	432	456	-
		Lo PR	105	112	122	-	111	118	129	-	115	122	134	-	121	129	140	-	127	135	147	-	131	139	152	-
	675	MBh	16.9	17.6	19.2	-	16.5	17.1	18.8	-	16.1	16.7	18.3	-	15.8	16.3	17.9	-	15.0	15.5	17.0	-	13.9	14.4	15.7	-
		S/T	0.74	0.62	0.43	-	0.77	0.64	0.45	-	0.79	0.66	0.46	-	0.81	0.68	0.47	-	0.85	0.71	0.49	-	0.85	0.71	0.49	-
		Δ T	17	15	11	-	17	15	11	-	17	15	11	-	17	15	11	-	17	15	11	-	16	14	11	-
		kW	1.28	1.31	1.34	-	1.37	1.40	1.44	-	1.45	1.48	1.52	-	1.52	1.55	1.59	-	1.57	1.61	1.66	-	1.62	1.66	1.71	-
		Amps	4.7	4.8	5.0	-	5.1	5.2	5.4	-	5.5	5.6	5.8	-	5.9	6.0	6.2	-	6.2	6.4	6.6	-	6.6	6.8	7.0	-
		Hi PR	222	239	253	-	249	268	283	-	284	305	322	-	323	348	367	-	363	391	413	-	402	432	456	-
		Lo PR	105	112	122	-	111	118	129	-	115	122	134	-	121	129	140	-	127	135	147	-	131	139	152	-
75	525	MBh	15.9	16.4	17.7	19.0	15.5	16.0	17.3	18.6	15.2	15.6	16.9	18.1	14.8	15.2	16.5	17.7	14.0	14.5	15.7	16.8	13.0	13.4	14.5	15.6
		S/T	0.81	0.73	0.55	0.35	0.84	0.75	0.57	0.37	0.86	0.77	0.59	0.38	0.89	0.80	0.60	0.39	0.93	0.83	0.63	0.40	0.93	0.84	0.63	0.41
		Δ T	23	21	17	12	23	21	17	12	23	21	17	12	23	21	17	12	23	21	17	12	21	20	16	11
		kW	1.27	1.29	1.33	1.36	1.35	1.38	1.42	1.46	1.43	1.46	1.50	1.54	1.49	1.52	1.57	1.62	1.55	1.58	1.63	1.68	1.60	1.63	1.68	1.73
		Amps	4.6	4.7	4.9	5.1	5.0	5.1	5.3	5.5	5.4	5.5	5.7	5.9	5.8	5.9	6.1	6.3	6.1	6.3	6.5	6.7	6.5	6.6	6.9	7.1
		Hi PR	218	234	247	258	244	263	278	290	278	299	316	329	317	341	360	375	356	383	405	422	393	423	447	466
		Lo PR	103	109	119	127	109	115	126	134	113	120	131	140	118	126	138	147	124	132	144	154	128	137	149	159
	650	MBh	17.2	17.7	19.2	20.6	16.8	17.3	18.7	20.1	16.4	16.9	18.3	19.6	16.0	**16.5**	17.9	19.2	15.2	15.7	17.0	18.2	14.1	14.5	15.7	16.9
		S/T	0.84	0.75	0.57	0.37	0.87	0.78	0.59	0.38	0.90	0.80	0.61	0.39	0.93	**0.83**	0.63	0.40	0.96	0.86	0.65	0.42	0.97	0.87	0.66	0.42
		Δ T	21	19	16	11	21	19	16	11	21	19	16	11	21	**19**	16	11	21	19	16	11	19	18	15	10
		kW	1.29	1.32	1.35	1.39	1.38	1.41	1.45	1.49	1.46	1.49	1.53	1.58	1.53	**1.56**	1.61	1.65	1.59	1.62	1.67	1.72	1.64	1.67	1.72	1.78
		Amps	4.8	4.9	5.0	5.2	5.1	5.2	5.4	5.6	5.6	5.7	5.9	6.1	5.9	**6.1**	6.3	6.5	6.3	6.4	6.7	6.9	6.7	6.8	7.0	7.3
		Hi PR	225	242	255	266	252	271	286	299	287	308	326	340	326	**351**	371	387	367	395	417	435	406	437	461	481
		Lo PR	106	113	123	131	112	119	130	138	116	124	135	144	122	**130**	142	151	128	136	149	158	132	141	154	164
	675	MBh	17.2	17.7	19.2	20.6	16.8	17.3	18.7	20.1	16.4	16.9	18.3	19.6	16.0	16.5	17.9	19.2	15.2	15.7	17.0	18.2	14.1	14.5	15.7	16.9
		S/T	0.84	0.75	0.57	0.37	0.87	0.78	0.59	0.38	0.90	0.80	0.61	0.39	0.93	0.83	0.63	0.40	0.96	0.86	0.65	0.42	0.97	0.87	0.66	0.42
		Δ T	20	18	15	10	20	18	15	10	20	18	15	10	20	19	15	11	20	18	15	10	19	17	14	10
		kW	1.29	1.32	1.35	1.39	1.38	1.41	1.45	1.49	1.46	1.49	1.53	1.58	1.53	1.56	1.61	1.65	1.59	1.62	1.67	1.72	1.64	1.67	1.72	1.78
		Amps	4.8	4.9	5.0	5.2	5.1	5.2	5.4	5.6	5.6	5.7	5.9	6.1	5.9	6.1	6.3	6.5	6.3	6.4	6.7	6.9	6.7	6.8	7.0	7.3
		Hi PR	225	242	255	266	252	271	286	299	287	308	326	340	326	351	371	387	367	395	417	435	406	437	461	481
		Lo PR	106	113	123	131	112	119	130	138	116	124	135	144	122	130	142	151	128	136	149	158	132	141	154	164

IDB: Entering Indoor Dry Bulb Temperature

Shaded area reflects ACCA (TVA) conditions

Amps = outdoor unit amps (comp.+fan)

High and low pressures are measured at the liquid and suction service valves.

kW = Total system power

			Outdoor Ambient Temperature																							
			65ºF				75ºF				85ºF				95ºF				105ºF				115ºF			
			Entering Indoor Wet Bulb Temperature																							
IDB	Airflow		59	63	67	71	59	63	67	71	59	63	67	71	59	63	67	71	59	63	67	71	59	63	67	71
80	525	MBh	16.2	16.5	17.7	18.9	15.8	16.1	17.3	18.4	15.4	15.8	16.8	18.0	15.0	15.4	16.4	17.6	14.3	14.6	15.6	16.7	13.2	13.5	14.5	15.5
		S/T	0.89	0.84	0.68	0.5	0.92	0.87	0.71	0.53	0.95	0.89	0.72	0.5	0.98	0.92	0.75	0.56	1.02	0.95	0.78	0.6	1.02	0.96	0.78	0.58
		Δ T	25	24	21	17	26	25	21	17	26	25	21	17	26	25	22	17	25	24	21	17	24	23	20	16
		kW	1.27	1.30	1.33	1.4	1.36	1.39	1.43	1.47	1.44	1.47	1.51	1.6	1.51	1.54	1.58	1.63	1.56	1.59	1.64	1.7	1.61	1.65	1.70	1.75
		Amps	4.7	4.8	4.9	5.1	5.0	5.2	5.3	5.5	5.5	5.6	5.8	6.0	5.8	6.0	6.2	6.4	6.2	6.3	6.5	6.8	6.5	6.7	6.9	7.2
		Hi PR	220	237	250	260.7	247	266	281	293	281	302	319	332.8	320	344	363	379	360	387	409	426.4	397	428	452	471
		Lo PR	104	110	121	128.3	110	117	127	136	114	121	132	140.9	120	127	139	148	125	133	146	155.1	130	138	151	160
	650	MBh	17.5	17.9	19.1	20.5	17.1	17.5	18.7	20.0	16.7	17.1	18.2	19.5	16.3	16.7	**17.8**	19.0	15.5	15.8	16.9	18.1	14.3	14.7	15.7	16.7
		S/T	0.93	0.87	0.71	0.5	0.96	0.90	0.73	0.55	0.98	0.92	0.75	0.6	1.00	0.95	**0.78**	0.58	1.00	0.99	0.80	0.6	1.00	1.00	0.81	0.61
		Δ T	23	22	19	15	23	22	19	15	23	22	19	15	23	22	**20**	16	22	22	19	15	20	21	18	14
		kW	1.30	1.33	1.36	1.4	1.39	1.42	1.46	1.50	1.47	1.50	1.54	1.6	1.54	1.57	**1.62**	1.67	1.60	1.63	1.68	1.7	1.65	1.68	1.74	1.79
		Amps	4.8	4.9	5.1	5.2	5.2	5.3	5.5	5.7	5.6	5.7	5.9	6.1	6.0	6.1	**6.3**	6.6	6.4	6.5	6.7	7.0	6.7	6.9	7.1	7.4
		Hi PR	227	244	258	268.8	254	274	289	302	289	311	329	343.0	330	355	**375**	391	371	399	421	439.5	410	441	466	486
		Lo PR	107	114	124	132.3	113	120	131	140	117	125	136	145.3	123	131	**143**	153	129	138	150	159.9	134	142	155	165
	675	MBh	17.5	17.9	19.1	20.5	17.1	17.5	18.7	20.0	16.7	17.1	18.2	19.5	16.3	16.7	17.8	19.0	15.5	15.8	16.9	18.1	14.3	14.7	15.7	16.7
		S/T	0.93	0.87	0.71	0.5	0.96	0.90	0.73	0.55	0.98	0.92	0.75	0.6	1.00	0.95	0.78	0.58	1.00	0.99	0.80	0.6	1.00	1.00	0.81	0.61
		Δ T	22	21	18	15	22	21	19	15	22	21	19	15	22	22	19	15	21	21	19	15	20	20	17	14
		kW	1.30	1.33	1.36	1.4	1.39	1.42	1.46	1.50	1.47	1.50	1.54	1.6	1.54	1.57	1.62	1.67	1.60	1.63	1.68	1.7	1.65	1.68	1.74	1.79
		Amps	4.8	4.9	5.1	5.2	5.2	5.3	5.5	5.7	5.6	5.7	5.9	6.1	6.0	6.1	6.3	6.6	6.4	6.5	6.7	7.0	6.7	6.9	7.1	7.4
		Hi PR	227	244	258	268.8	254	274	289	302	289	311	329	343.0	330	355	375	391	371	399	421	439.5	410	441	466	486
		Lo PR	107	114	124	132.3	113	120	131	140	117	125	136	145.3	123	131	143	153	129	138	150	159.9	134	142	155	165
85	525	MBh	16.5	16.8	17.6	18.7	16.1	16.4	17.2	18.3	15.7	16.0	16.8	17.9	15.3	15.6	16.3	17.4	14.5	14.8	15.5	16.6	13.5	13.7	14.4	15.3
		S/T	0.94	0.90	0.81	0.66	0.97	0.94	0.84	0.69	0.99	0.96	0.87	0.70	1.00	0.99	0.89	0.73	1.00	1.00	0.93	0.75	1.00	1.00	0.94	0.76
		Δ T	27	27	25	22	27	27	25	22	27	27	25	22	27	27	26	22	25	26	25	22	24	24	24	20
		kW	1.28	1.31	1.34	1.38	1.37	1.40	1.44	1.48	1.45	1.48	1.52	1.57	1.52	1.55	1.59	1.64	1.57	1.61	1.65	1.71	1.62	1.66	1.71	1.76
		Amps	4.7	4.8	5.0	5.1	5.1	5.2	5.4	5.6	5.5	5.6	5.8	6.0	5.9	6.0	6.2	6.4	6.2	6.4	6.6	6.8	6.6	6.8	7.0	7.2
		Hi PR	222	239	252	263	249	268	283	296	284	305	322	336	323	348	367	383	363	391	413	431	401	432	456	476
		Lo PR	105	111	122	130	111	118	129	137	115	122	134	142	121	129	140	150	127	135	147	157	131	139	152	162
	650	MBh	17.8	18.2	19.0	20.3	17.4	17.8	18.6	19.8	17.0	17.3	18.2	19.4	16.6	16.9	17.7	18.9	15.8	16.1	16.8	18.0	14.6	14.9	15.6	16.6
		S/T	0.97	0.94	0.84	0.69	1.00	0.97	0.88	0.71	1.00	0.99	0.90	0.73	1.00	1.00	0.93	0.75	1.00	1.00	0.96	0.78	1.00	1.00	0.97	0.79
		Δ T	24	24	23	20	25	24	23	20	24	24	23	20	23	24	23	20	22	23	23	20	21	21	21	19
		kW	1.31	1.34	1.37	1.41	1.40	1.43	1.47	1.51	1.48	1.51	1.56	1.60	1.55	1.58	1.63	1.68	1.61	1.64	1.69	1.75	1.66	1.70	1.75	1.80
		Amps	4.8	4.9	5.1	5.3	5.2	5.3	5.5	5.7	5.7	5.8	6.0	6.2	6.0	6.2	6.4	6.6	6.4	6.6	6.8	7.0	6.8	6.9	7.2	7.4
		Hi PR	229	247	260	271	257	277	292	305	292	315	332	346	333	358	378	395	375	403	426	444	414	445	470	491
		Lo PR	108	115	125	134	114	121	133	141	119	126	138	147	125	133	145	154	131	139	152	162	135	144	157	167
	675	MBh	17.8	18.2	19.0	20.3	17.4	17.8	18.6	19.8	17.0	17.3	18.2	19.4	16.6	16.9	17.7	18.9	15.8	16.1	16.8	18.0	14.6	14.9	15.6	16.6
		S/T	0.97	0.94	0.84	0.69	1.00	0.97	0.88	0.71	1.00	0.99	0.90	0.73	1.00	1.00	0.93	0.75	1.00	1.00	0.96	0.78	1.00	1.00	0.97	0.79
		Δ T	24	23	22	19	24	23	22	19	23	23	22	19	23	23	22	19	21	22	22	19	20	20	21	18
		kW	1.31	1.34	1.37	1.41	1.40	1.43	1.47	1.51	1.48	1.51	1.56	1.60	1.55	1.58	1.63	1.68	1.61	1.64	1.69	1.75	1.66	1.70	1.75	1.80
		Amps	4.8	4.9	5.1	5.3	5.2	5.3	5.5	5.7	5.7	5.8	6.0	6.2	6.0	6.2	6.4	6.6	6.4	6.6	6.8	7.0	6.8	6.9	7.2	7.4
		Hi PR	229	247	260	271	257	277	292	305	292	315	332	346	333	358	378	395	375	403	426	444	414	445	470	491
		Lo PR	108	115	125	134	114	121	133	141	119	126	138	147	125	133	145	154	131	139	152	162	135	144	157	167

IDB: Entering Indoor Dry Bulb Temperature

Shaded area reflects AHRI conditions

Amps = outdoor unit amps (comp.+fan)

High and low pressures are measured at the liquid and suction service valves.

kW = Total system power

			OUTDOOR AMBIENT TEMPERATURE																							
			65ºF				75ºF				85ºF				95ºF				105ºF				115ºF			
			ENTERING INDOOR WET BULB TEMPERATURE																							
IDB	AIRFLOW		59	63	67	71	59	63	67	71	59	63	67	71	59	63	67	71	59	63	67	71	59	63	67	71
70	700	MBh	20.2	20.9	22.9	-	19.7	20.4	22.4	-	19.3	20.0	21.9	-	18.8	19.5	21.3	-	17.8	18.5	20.3	-	16.5	17.1	18.8	-
		S/T	0.68	0.57	0.39	-	0.70	0.59	0.41	-	0.72	0.60	0.42	-	0.75	0.62	0.43	-	0.77	0.65	0.45	-	0.78	0.65	0.45	-
		Δ T	18	16	12	-	18	16	12	-	18	16	12	-	18	16	12	-	18	16	12	-	17	15	11	-
		kW	1.61	1.64	1.69	-	1.72	1.75	1.81	-	1.82	1.86	1.91	-	1.91	1.95	2.01	-	1.98	2.03	2.09	-	2.05	2.09	2.16	-
		Amps	5.9	6.1	6.3	-	6.4	6.5	6.8	-	6.9	7.1	7.3	-	7.4	7.6	7.9	-	7.9	8.1	8.4	-	8.4	8.6	8.9	-
		Hi PR	222	239	252	-	249	268	283	-	283	305	322	-	323	347	367	-	363	391	412	-	401	432	456	-
		Lo PR	101	108	117	-	107	114	124	-	111	118	129	-	117	124	135	-	122	130	142	-	126	134	147	-
	800	MBh	21.9	22.7	24.8	-	21.4	22.2	24.3	-	20.9	21.6	23.7	-	20.4	21.1	23.1	-	19.3	20.0	22.0	-	17.9	18.6	20.3	-
		S/T	0.71	0.59	0.41	-	0.73	0.61	0.42	-	0.75	0.63	0.43	-	0.77	0.65	0.45	-	0.80	0.67	0.46	-	0.81	0.68	0.47	-
		Δ T	18	15	12	-	18	16	12	-	18	16	12	-	18	16	12	-	18	15	12	-	17	14	11	-
		kW	1.64	1.67	1.72	-	1.76	1.80	1.85	-	1.86	1.90	1.96	-	1.96	2.00	2.06	-	2.03	2.08	2.14	-	2.10	2.14	2.21	-
		Amps	6.1	6.2	6.4	-	6.6	6.7	7.0	-	7.1	7.3	7.6	-	7.6	7.8	8.1	-	8.1	8.3	8.6	-	8.6	8.8	9.1	-
		Hi PR	229	246	260	-	257	276	292	-	292	314	332	-	333	358	378	-	374	403	425	-	413	445	470	-
		Lo PR	104	111	121	-	110	117	128	-	114	122	133	-	120	128	140	-	126	134	146	-	130	139	151	-
	900	MBh	22.5	23.4	25.6	-	22.0	22.8	25.0	-	21.5	22.3	24.4	-	21.0	21.7	23.8	-	19.9	20.6	22.6	-	18.4	19.1	21.0	-
		S/T	0.74	0.62	0.43	-	0.77	0.64	0.44	-	0.79	0.66	0.45	-	0.81	0.68	0.47	-	0.84	0.70	0.49	-	0.85	0.71	0.49	-
		Δ T	17	15	11	-	17	15	11	-	17	15	11	-	17	15	11	-	17	15	11	-	16	14	11	-
		kW	1.65	1.69	1.74	-	1.77	1.81	1.86	-	1.88	1.92	1.98	-	1.97	2.01	2.07	-	2.05	2.09	2.16	-	2.12	2.16	2.23	-
		Amps	6.1	6.3	6.5	-	6.6	6.8	7.0	-	7.2	7.4	7.6	-	7.7	7.9	8.2	-	8.2	8.4	8.7	-	8.7	8.9	9.2	-
		Hi PR	231	249	263	-	259	279	295	-	295	317	335	-	336	362	382	-	378	407	429	-	418	449	475	-
		Lo PR	105	112	122	-	111	118	129	-	116	123	134	-	121	129	141	-	127	135	148	-	132	140	153	-
75	700	MBh	20.5	21.1	22.9	24.6	20.1	20.7	22.4	24.0	19.6	20.2	21.8	23.4	19.1	19.7	21.3	22.9	18.2	18.7	20.2	21.7	16.8	17.3	18.7	20.1
		S/T	0.77	0.69	0.52	0.34	0.80	0.72	0.54	0.35	0.82	0.73	0.56	0.36	0.85	0.76	0.57	0.37	0.88	0.79	0.60	0.38	0.89	0.79	0.60	0.39
		Δ T	21	19	16	11	21	19	16	11	21	19	16	11	21	20	16	11	21	19	16	11	20	18	15	10
		kW	1.62	1.65	1.70	1.75	1.73	1.77	1.82	1.88	1.83	1.87	1.93	1.99	1.92	1.96	2.02	2.09	2.00	2.04	2.11	2.17	2.07	2.11	2.18	2.25
		Amps	6.0	6.1	6.3	6.5	6.4	6.6	6.8	7.1	7.0	7.2	7.4	7.7	7.5	7.7	7.9	8.2	8.0	8.2	8.4	8.8	8.4	8.7	8.9	9.3
		Hi PR	224	241	255	266	252	271	286	298	286	308	325	339	326	351	370	386	367	395	417	435	405	436	460	480
		Lo PR	102	109	119	126	108	115	125	133	112	119	130	139	118	125	137	146	123	131	143	153	128	136	148	158
	800	MBh	22.3	22.9	24.8	26.6	21.7	22.4	24.2	26.0	21.2	21.8	23.6	25.4	20.7	**21.3**	23.1	24.8	19.7	20.2	21.9	23.5	18.2	18.8	20.3	21.8
		S/T	0.80	0.72	0.54	0.35	0.83	0.74	0.56	0.36	0.85	0.76	0.58	0.37	0.88	**0.79**	0.60	0.38	0.91	0.82	0.62	0.40	0.92	0.82	0.62	0.40
		Δ T	20	19	15	11	21	19	16	11	21	19	16	11	21	**19**	16	11	21	19	16	11	19	18	15	10
		kW	1.65	1.69	1.74	1.79	1.77	1.81	1.86	1.92	1.88	1.92	1.98	2.04	1.97	**2.01**	2.07	2.14	2.05	2.09	2.16	2.23	2.12	2.16	2.23	2.30
		Amps	6.1	6.3	6.5	6.7	6.6	6.8	7.0	7.3	7.2	7.4	7.6	7.9	7.7	**7.9**	8.2	8.5	8.2	8.4	8.7	9.0	8.7	8.9	9.2	9.6
		Hi PR	231	249	263	274	259	279	295	307	295	317	335	350	336	**362**	382	398	378	407	430	448	418	449	475	495
		Lo PR	105	112	122	130	111	118	129	138	116	123	134	143	121	**129**	141	150	127	135	148	157	132	140	153	163
	900	MBh	22.9	23.6	25.5	27.4	22.4	23.0	24.9	26.8	21.9	22.5	24.4	26.1	21.3	22.0	23.8	25.5	20.3	20.9	22.6	24.2	18.8	19.3	20.9	22.4
		S/T	0.84	0.75	0.57	0.37	0.87	0.78	0.59	0.38	0.89	0.80	0.60	0.39	0.92	0.82	0.62	0.40	0.96	0.86	0.65	0.42	0.96	0.86	0.65	0.42
		Δ T	20	18	15	10	20	18	15	10	20	18	15	10	20	18	15	10	20	18	15	10	18	17	14	10
		kW	1.67	1.70	1.75	1.80	1.79	1.82	1.88	1.94	1.89	1.93	1.99	2.05	1.99	2.03	2.09	2.16	2.07	2.11	2.18	2.25	2.13	2.18	2.25	2.32
		Amps	6.2	6.3	6.5	6.8	6.7	6.9	7.1	7.3	7.3	7.4	7.7	8.0	7.8	8.0	8.2	8.5	8.3	8.5	8.8	9.1	8.8	9.0	9.3	9.6
		Hi PR	233	251	265	277	262	282	298	311	298	321	339	353	339	365	386	402	382	411	434	453	422	454	479	500
		Lo PR	106	113	123	131	112	119	130	139	117	124	136	144	123	130	142	152	128	137	149	159	133	141	154	164

IDB: Entering Indoor Dry Bulb Temperature

Shaded area reflects ACCA (TVA) conditions

Amps = outdoor unit amps (comp.+fan)

High and low pressures are measured at the liquid and suction service valves.

kW = Total system power

			OUTDOOR AMBIENT TEMPERATURE																							
			65ºF				75ºF				85ºF				95ºF				105ºF				115ºF			
			ENTERING INDOOR WET BULB TEMPERATURE																							
IDB	AIRFLOW		59	63	67	71	59	63	67	71	59	63	67	71	59	63	67	71	59	63	67	71	59	63	67	71
80	700	MBh	20.9	21.4	22.8	24.4	20.4	20.9	22.3	23.8	19.9	20.4	21.8	23.3	19.4	19.9	21.2	22.7	18.5	18.9	20.2	21.6	17.1	17.5	18.7	20.0
		S/T	0.85	0.79	0.65	0.5	0.88	0.82	0.67	0.50	0.90	0.84	0.69	0.5	0.93	0.87	0.71	0.53	0.96	0.90	0.74	0.6	0.97	0.91	0.74	0.56
		Δ T	23	22	19	15	24	23	20	16	24	23	20	16	24	23	20	16	23	22	20	16	22	21	18	15
		kW	1.63	1.66	1.71	1.8	1.75	1.78	1.83	1.89	1.85	1.89	1.94	2.0	1.94	1.98	2.04	2.11	2.02	2.06	2.12	2.2	2.08	2.13	2.19	2.26
		Amps	6.0	6.2	6.4	6.6	6.5	6.7	6.9	7.1	7.1	7.2	7.5	7.8	7.6	7.7	8.0	8.3	8.0	8.2	8.5	8.8	8.5	8.7	9.0	9.4
		Hi PR	227	244	257	268.5	254	274	289	301	289	311	328	342.6	329	354	374	390	370	399	421	439.0	409	440	465	485
		Lo PR	103	110	120	127.5	109	116	127	135	113	120	131	140.0	119	127	138	147	125	133	145	154.2	129	137	150	159
	800	MBh	22.6	23.1	24.7	26.4	22.1	22.6	24.2	25.8	21.6	22.1	23.6	25.2	21.1	21.5	**23.0**	24.6	20.0	20.5	21.9	23.4	18.5	18.9	20.2	21.6
		S/T	0.88	0.82	0.67	0.5	0.91	0.85	0.70	0.52	0.93	0.88	0.71	0.5	0.96	0.90	**0.74**	0.55	1.00	0.94	0.76	0.6	1.00	0.95	0.77	0.58
		Δ T	23	22	19	15	23	22	19	15	23	22	19	15	23	22	**19**	16	23	22	19	15	21	21	18	14
		kW	1.67	1.70	1.75	1.8	1.79	1.82	1.88	1.94	1.89	1.93	1.99	2.1	1.99	2.03	**2.09**	2.16	2.07	2.11	2.18	2.2	2.13	2.18	2.25	2.32
		Amps	6.2	6.3	6.5	6.8	6.7	6.9	7.1	7.3	7.3	7.5	7.7	8.0	7.8	8.0	**8.2**	8.5	8.3	8.5	8.8	9.1	8.8	9.0	9.3	9.7
		Hi PR	234	251	265	276.8	262	282	298	311	298	321	339	353.2	339	365	**386**	402	382	411	434	452.6	422	454	479	500
		Lo PR	106	113	123	131.5	112	119	130	139	117	124	136	144.4	123	130	**142**	152	128	137	149	158.9	133	141	154	164
	900	MBh	23.3	23.8	25.5	27.2	22.8	23.3	24.9	26.6	22.2	22.7	24.3	26.0	21.7	22.2	23.7	25.3	20.6	21.1	22.5	24.1	19.1	19.5	20.8	22.3
		S/T	0.92	0.86	0.70	0.5	0.96	0.90	0.73	0.54	1.00	0.92	0.75	0.6	1.00	0.95	0.77	0.58	1.00	1.00	0.80	0.6	1.00	1.00	0.81	0.60
		Δ T	22	21	18	15	22	21	19	15	23	21	19	15	22	21	19	15	21	22	18	15	20	20	17	14
		kW	1.68	1.71	1.76	1.8	1.80	1.84	1.89	1.95	1.91	1.95	2.01	2.1	2.00	2.04	2.11	2.17	2.08	2.13	2.19	2.3	2.15	2.20	2.27	2.34
		Amps	6.2	6.4	6.6	6.9	6.8	6.9	7.1	7.4	7.3	7.5	7.8	8.1	7.8	8.0	8.3	8.6	8.4	8.6	8.8	9.2	8.9	9.1	9.4	9.7
		Hi PR	236	254	268	279.5	265	285	301	314	301	324	342	356.7	343	369	390	406	386	415	438	457.1	426	459	484	505
		Lo PR	107	114	125	132.8	113	121	132	140	118	125	137	145.8	124	132	144	153	130	138	151	160.5	134	143	156	166
85	700	MBh	21.3	21.7	22.7	24.2	20.8	21.2	22.2	23.7	20.3	20.7	21.7	23.1	19.8	20.2	21.1	22.5	18.8	19.2	20.1	21.4	17.4	17.7	18.6	19.8
		S/T	0.89	0.86	0.77	0.63	0.92	0.89	0.80	0.65	0.94	0.91	0.82	0.67	0.97	0.94	0.85	0.69	1.00	0.98	0.88	0.71	1.00	0.98	0.89	0.72
		Δ T	25	24	23	20	25	25	23	20	25	25	23	20	25	25	24	20	25	25	23	20	23	23	22	19
		kW	1.64	1.67	1.72	1.78	1.76	1.79	1.85	1.91	1.86	1.90	1.96	2.02	1.95	2.00	2.06	2.12	2.03	2.08	2.14	2.21	2.10	2.14	2.21	2.28
		Amps	6.1	6.2	6.4	6.7	6.6	6.7	6.9	7.2	7.1	7.3	7.6	7.8	7.6	7.8	8.1	8.4	8.1	8.3	8.6	8.9	8.6	8.8	9.1	9.5
		Hi PR	229	246	260	271	257	276	292	304	292	314	332	346	333	358	378	394	374	403	425	443	413	445	470	490
		Lo PR	104	111	121	129	110	117	128	136	114	122	133	141	120	128	140	149	126	134	146	156	130	139	151	161
	800	MBh	23.0	23.5	24.6	26.2	22.5	22.9	24.0	25.6	22.0	22.4	23.5	25.0	21.4	21.9	22.9	24.4	20.4	20.8	21.7	23.2	18.9	19.2	20.1	21.5
		S/T	0.92	0.89	0.80	0.65	0.95	0.92	0.83	0.67	0.98	0.94	0.85	0.69	1.00	0.98	0.88	0.71	1.00	1.00	0.91	0.74	1.00	1.00	0.92	0.75
		Δ T	24	24	23	20	25	24	23	20	25	24	23	20	25	24	23	20	23	24	23	20	22	22	21	18
		kW	1.68	1.71	1.76	1.82	1.80	1.84	1.89	1.95	1.91	1.95	2.01	2.07	2.00	2.04	2.11	2.17	2.08	2.13	2.19	2.26	2.15	2.20	2.27	2.34
		Amps	6.2	6.4	6.6	6.9	6.8	6.9	7.1	7.4	7.3	7.5	7.8	8.1	7.8	8.0	8.3	8.6	8.4	8.6	8.8	9.2	8.9	9.1	9.4	9.7
		Hi PR	236	254	268	280	265	285	301	314	301	324	342	357	343	369	390	406	386	415	438	457	426	459	484	505
		Lo PR	107	114	125	133	113	121	132	140	118	125	137	146	124	132	144	153	130	138	151	161	134	143	156	166
	900	MBh	23.7	24.2	25.3	27.0	23.2	23.6	24.8	26.4	22.6	23.1	24.2	25.8	22.1	22.5	23.6	25.1	21.0	21.4	22.4	23.9	19.4	19.8	20.7	22.1
		S/T	0.97	0.93	0.84	0.68	1.00	0.97	0.87	0.71	1.00	0.99	0.89	0.73	1.00	1.00	0.92	0.75	1.00	1.00	0.96	0.78	1.00	1.00	0.97	0.78
		Δ T	23	23	22	19	24	23	22	19	23	23	22	19	23	23	22	19	21	22	22	19	20	20	20	18
		kW	1.69	1.73	1.78	1.83	1.81	1.85	1.91	1.97	1.92	1.96	2.02	2.09	2.02	2.06	2.12	2.19	2.10	2.14	2.21	2.28	2.17	2.21	2.29	2.36
		Amps	6.3	6.5	6.7	6.9	6.8	7.0	7.2	7.5	7.4	7.6	7.8	8.1	7.9	8.1	8.4	8.7	8.4	8.6	8.9	9.3	8.9	9.2	9.5	9.8
		Hi PR	238	256	271	282	267	288	304	317	304	327	345	360	346	373	393	410	390	419	443	462	430	463	489	510
		Lo PR	108	115	126	134	115	122	133	142	119	127	138	147	125	133	145	155	131	139	152	162	136	144	157	168

IDB: Entering Indoor Dry Bulb Temperature

Shaded area reflects AHRI conditions

Amps = outdoor unit amps (comp.+fan)

High and low pressures are measured at the liquid and suction service valves.

kW = Total system power

			OUTDOOR AMBIENT TEMPERATURE																							
			65ºF				75ºF				85ºF				95ºF				105ºF				115ºF			
			ENTERING INDOOR WET BULB TEMPERATURE																							
IDB	AIRFLOW		59	63	67	71	59	63	67	71	59	63	67	71	59	63	67	71	59	63	67	71	59	63	67	71
70	900	MBh	22.5	23.4	25.6	-	22.0	22.8	25.0	-	21.5	22.3	24.4	-	21.0	21.7	23.8	-	19.9	20.6	22.6	-	18.4	19.1	21.0	-
		S/T	0.73	0.61	0.42	-	0.76	0.63	0.44	-	0.78	0.65	0.45	-	0.80	0.67	0.46	-	0.83	0.69	0.48	-	0.84	0.70	0.49	-
		ΔT	17	15	11	-	17	15	11	-	17	15	11	-	17	15	11	-	17	15	11	-	16	14	10	-
		kW	1.63	1.66	1.71	-	1.75	1.78	1.83	-	1.85	1.89	1.95	-	1.94	1.98	2.04	-	2.02	2.06	2.13	-	2.09	2.13	2.20	-
		Amps	5.8	6.0	6.2	-	6.3	6.4	6.7	-	6.8	7.0	7.2	-	7.3	7.5	7.7	-	7.8	8.0	8.2	-	8.2	8.4	8.7	-
		Hi PR	228	246	259	-	256	276	291	-	291	314	331	-	332	357	377	-	373	402	424	-	413	444	469	-
		Lo PR	105	112	122	-	111	118	129	-	115	123	134	-	121	129	141	-	127	135	147	-	131	140	152	-
	800	MBh	21.9	22.7	24.8	-	21.4	22.2	24.3	-	20.9	21.6	23.7	-	20.4	21.1	23.1	-	19.3	20.0	22.0	-	17.9	18.6	20.3	-
		S/T	0.70	0.58	0.40	-	0.72	0.60	0.42	-	0.74	0.62	0.43	-	0.76	0.64	0.44	-	0.79	0.66	0.46	-	0.80	0.67	0.46	-
		ΔT	18	15	12	-	18	15	12	-	18	15	12	-	18	15	12	-	18	15	12	-	16	14	11	-
		kW	1.62	1.65	1.70	-	1.73	1.77	1.82	-	1.84	1.87	1.93	-	1.93	1.97	2.03	-	2.00	2.05	2.11	-	2.07	2.11	2.18	-
		Amps	5.8	5.9	6.1	-	6.2	6.4	6.6	-	6.8	6.9	7.2	-	7.2	7.4	7.7	-	7.7	7.9	8.1	-	8.2	8.4	8.6	-
		Hi PR	226	243	257	-	254	273	288	-	288	310	328	-	329	354	373	-	370	398	420	-	408	440	464	-
		Lo PR	104	111	121	-	110	117	127	-	114	121	132	-	120	127	139	-	126	134	146	-	130	138	151	-
	700	MBh	20.2	20.9	22.9	-	19.7	20.4	22.4	-	19.3	20.0	21.9	-	18.8	19.5	21.3	-	17.8	18.5	20.3	-	16.5	17.1	18.8	-
		S/T	0.67	0.56	0.39	-	0.70	0.58	0.40	-	0.71	0.60	0.41	-	0.74	0.62	0.43	-	0.76	0.64	0.44	-	0.77	0.64	0.45	-
		ΔT	18	15	12	-	18	16	12	-	18	16	12	-	18	16	12	-	18	16	12	-	17	14	11	-
		kW	1.58	1.61	1.66	-	1.69	1.73	1.78	-	1.79	1.83	1.89	-	1.88	1.92	1.98	-	1.96	2.00	2.06	-	2.02	2.06	2.13	-
		Amps	5.6	5.7	5.9	-	6.1	6.2	6.4	-	6.6	6.7	7.0	-	7.0	7.2	7.4	-	7.5	7.7	7.9	-	7.9	8.1	8.4	-
		Hi PR	219	236	249	-	246	265	280	-	280	301	318	-	319	343	362	-	359	386	407	-	396	426	450	-
		Lo PR	101	107	117	-	106	113	124	-	111	118	129	-	116	124	135	-	122	130	141	-	126	134	146	-
75	900	MBh	22.9	23.6	25.5	27.4	22.4	23.0	24.9	26.8	21.9	22.5	24.4	26.1	21.3	22.0	23.8	25.5	20.3	20.9	22.6	24.2	18.8	19.3	20.9	22.4
		S/T	0.83	0.74	0.56	0.36	0.86	0.77	0.58	0.37	0.88	0.79	0.60	0.38	0.91	0.81	0.62	0.40	0.95	0.85	0.64	0.41	0.95	0.85	0.65	0.42
		ΔT	19	18	15	10	20	18	15	10	20	18	15	10	20	18	15	10	20	18	15	10	18	17	14	10
		kW	1.64	1.67	1.72	1.77	1.76	1.79	1.85	1.91	1.86	1.90	1.96	2.02	1.96	2.00	2.06	2.13	2.04	2.08	2.15	2.21	2.10	2.15	2.22	2.29
		Amps	5.9	6.0	6.2	6.4	6.3	6.5	6.7	7.0	6.9	7.1	7.3	7.6	7.4	7.5	7.8	8.1	7.8	8.0	8.3	8.6	8.3	8.5	8.8	9.1
		Hi PR	231	248	262	273	259	279	294	307	294	317	334	349	335	361	381	397	377	406	429	447	417	448	474	494
		Lo PR	106	113	123	131	112	119	130	139	116	124	135	144	122	130	142	151	128	136	149	158	133	141	154	164
	800	MBh	22.3	22.9	24.8	26.6	21.7	22.4	24.2	26.0	21.2	**21.8**	23.6	25.4	20.7	21.3	23.1	24.8	19.7	20.2	21.9	23.5	18.2	18.8	20.3	21.8
		S/T	0.79	0.71	0.54	0.34	0.82	0.73	0.56	0.36	0.84	**0.75**	0.57	0.37	0.87	0.78	0.59	0.38	0.90	0.81	0.61	0.39	0.91	0.81	0.62	0.40
		ΔT	20	19	15	11	20	19	15	11	21	**19**	15	11	21	19	16	11	20	19	15	11	19	18	14	10
		kW	1.63	1.66	1.71	1.76	1.75	1.78	1.84	1.89	1.85	**1.89**	1.95	2.01	1.94	1.98	2.04	2.11	2.02	2.06	2.13	2.20	2.09	2.13	2.20	2.27
		Amps	5.8	6.0	6.2	6.4	6.3	6.4	6.7	6.9	6.8	**7.0**	7.2	7.5	7.3	7.5	7.7	8.0	7.8	8.0	8.2	8.5	8.2	8.4	8.7	9.1
		Hi PR	228	246	260	271	256	276	291	304	291	**314**	331	345	332	357	377	393	373	402	424	443	413	444	469	489
		Lo PR	105	112	122	130	111	118	129	137	115	**123**	134	143	121	129	141	150	127	135	147	157	131	140	152	162
	700	MBh	20.5	21.1	22.9	24.6	20.1	20.7	22.4	24.0	19.6	20.2	21.8	23.4	19.1	19.7	21.3	22.9	18.2	18.7	20.2	21.7	16.8	17.3	18.7	20.1
		S/T	0.76	0.68	0.52	0.33	0.79	0.71	0.54	0.34	0.81	0.73	0.55	0.35	0.84	0.75	0.57	0.36	0.87	0.78	0.59	0.38	0.88	0.78	0.59	0.38
		ΔT	21	19	16	11	21	19	16	11	21	19	16	11	21	19	16	11	21	19	16	11	19	18	15	10
		kW	1.59	1.62	1.67	1.72	1.71	1.74	1.79	1.85	1.81	1.84	1.90	1.96	1.90	1.94	2.00	2.06	1.97	2.01	2.08	2.14	2.04	2.08	2.15	2.22
		Amps	5.7	5.8	6.0	6.2	6.1	6.3	6.5	6.7	6.6	6.8	7.0	7.3	7.1	7.3	7.5	7.8	7.6	7.7	8.0	8.3	8.0	8.2	8.5	8.8
		Hi PR	222	238	252	263	249	267	282	295	283	304	321	335	322	346	366	382	362	390	412	429	400	431	455	474
		Lo PR	102	108	118	126	108	114	125	133	112	119	130	138	117	125	136	145	123	131	143	152	127	135	148	157

IDB: Entering Indoor Dry Bulb Temperature

Shaded area reflects ACCA (TVA) conditions

Amps = outdoor unit amps (comp.+fan)

High and low pressures are measured at the liquid and suction service valves.

kW = Total system power

			Outdoor Ambient Temperature																							
			65ºF				75ºF				85ºF				95ºF				105ºF				115ºF			
			Entering Indoor Wet Bulb Temperature																							
IDB	Airflow		59	63	67	71	59	63	67	71	59	63	67	71	59	63	67	71	59	63	67	71	59	63	67	71
80	900	MBh	23.3	23.8	25.5	27.2	22.8	23.3	24.9	26.6	22.2	22.7	24.3	26.0	21.7	22.2	23.7	25.3	20.6	21.1	22.5	24.1	19.1	19.5	20.8	22.3
		S/T	0.91	0.85	0.69	0.52	0.94	0.88	0.72	0.54	0.97	0.91	0.74	0.55	1.00	0.94	0.76	0.57	1.00	1.00	0.79	0.59	1.00	1.00	0.80	0.60
		ΔT	22	21	18	14	22	21	18	15	22	21	18	15	22	21	18	15	21	22	18	15	20	20	17	14
		kW	1.65	1.69	1.74	1.79	1.77	1.81	1.86	1.92	1.88	1.92	1.98	2.04	1.97	2.01	2.08	2.14	2.05	2.10	2.16	2.23	2.12	2.17	2.24	2.31
		Amps	5.9	6.1	6.3	6.5	6.4	6.6	6.8	7.0	7.0	7.1	7.4	7.6	7.4	7.6	7.9	8.2	7.9	8.1	8.4	8.7	8.4	8.6	8.9	9.2
		Hi PR	233	251	265	276	261	281	297	310	297	320	338	352	339	364	385	401	381	410	433	452	421	453	478	499
		Lo PR	107	114	124	132	113	120	131	140	118	125	137	145	123	131	143	153	129	138	150	160	134	142	155	166
	800	MBh	22.6	23.1	24.7	26.4	22.1	22.6	24.2	25.8	21.6	22.1	23.6	25.2	21.1	21.5	**23.0**	24.6	20.0	20.5	21.9	23.4	18.5	18.9	20.2	21.6
		S/T	0.87	0.81	0.66	0.50	0.90	0.84	0.69	0.51	0.92	0.87	0.70	0.53	0.95	0.89	**0.73**	0.54	0.99	0.93	0.75	0.56	1.00	0.93	0.76	0.57
		ΔT	23	22	19	15	23	22	19	15	23	22	19	15	23	22	**19**	15	23	22	19	15	21	20	18	14
		kW	1.64	1.67	1.72	1.78	1.76	1.79	1.85	1.91	1.86	1.90	1.96	2.02	1.96	2.00	**2.06**	2.13	2.04	2.08	2.15	2.21	2.10	2.15	2.22	2.29
		Amps	5.9	6.0	6.2	6.4	6.3	6.5	6.7	7.0	6.9	7.1	7.3	7.6	7.4	7.5	**7.8**	8.1	7.8	8.0	8.3	8.6	8.3	8.5	8.8	9.1
		Hi PR	231	248	262	273	259	279	294	307	294	317	335	349	335	361	**381**	397	377	406	429	447	417	448	474	494
		Lo PR	106	113	123	131	112	119	130	139	116	124	135	144	122	130	**142**	151	128	136	149	158	133	141	154	164
	700	MBh	20.9	21.4	22.8	24.4	20.4	20.9	22.3	23.8	19.9	20.4	21.8	23.3	19.4	19.9	21.2	22.7	18.5	18.9	20.2	21.6	17.1	17.5	18.7	20.0
		S/T	0.84	0.79	0.64	0.48	0.87	0.81	0.66	0.50	0.89	0.83	0.68	0.51	0.92	0.86	0.70	0.52	0.95	0.89	0.73	0.54	0.96	0.90	0.73	0.55
		ΔT	23	22	19	15	23	22	19	15	23	22	19	16	23	22	20	16	23	22	19	15	22	21	18	14
		kW	1.60	1.63	1.68	1.73	1.72	1.75	1.81	1.86	1.82	1.86	1.92	1.98	1.91	1.95	2.01	2.08	1.99	2.03	2.09	2.16	2.05	2.10	2.16	2.23
		Amps	5.7	5.9	6.0	6.3	6.2	6.3	6.5	6.8	6.7	6.9	7.1	7.4	7.2	7.3	7.6	7.9	7.6	7.8	8.1	8.4	8.1	8.3	8.6	8.9
		Hi PR	224	241	254	265	251	270	285	298	286	307	324	338	325	350	370	385	366	394	416	434	404	435	459	479
		Lo PR	103	109	119	127	109	116	126	134	113	120	131	140	119	126	138	147	124	132	144	154	129	137	149	159
85	900	MBh	23.7	24.2	25.3	27.0	23.2	23.6	24.8	26.4	22.6	23.1	24.2	25.8	22.1	22.5	23.6	25.1	21.0	21.4	22.4	23.9	19.4	19.8	20.7	22.1
		S/T	0.95	0.92	0.83	0.67	0.99	0.95	0.86	0.70	1.00	0.98	0.88	0.72	1.00	1.00	0.91	0.74	1.00	1.00	0.95	0.77	1.00	1.00	0.95	0.77
		ΔT	23	23	22	19	23	23	22	19	23	23	22	19	23	23	22	19	21	22	22	19	20	20	20	17
		kW	1.66	1.70	1.75	1.80	1.79	1.82	1.88	1.94	1.89	1.93	1.99	2.06	1.99	2.03	2.09	2.16	2.07	2.11	2.18	2.25	2.14	2.18	2.25	2.33
		Amps	6.0	6.1	6.3	6.6	6.5	6.6	6.8	7.1	7.0	7.2	7.4	7.7	7.5	7.7	7.9	8.2	8.0	8.2	8.5	8.8	8.5	8.7	9.0	9.3
		Hi PR	235	253	267	279	264	284	300	313	300	323	341	356	342	368	389	405	385	414	437	456	425	457	483	504
		Lo PR	108	115	126	134	114	122	133	141	119	126	138	147	125	133	145	154	131	139	152	162	135	144	157	167
	800	MBh	23.0	23.5	24.6	26.2	22.5	22.9	24.0	25.6	22.0	22.4	23.5	25.0	21.4	21.9	22.9	24.4	20.4	20.8	21.7	23.2	18.9	19.2	20.1	21.5
		S/T	0.91	0.88	0.79	0.64	0.94	0.91	0.82	0.67	0.97	0.93	0.84	0.68	1.00	0.96	0.87	0.71	1.00	1.00	0.90	0.73	1.00	1.00	0.91	0.74
		ΔT	24	24	22	19	24	24	23	20	24	24	23	20	25	24	23	20	23	24	23	20	22	22	21	18
		kW	1.65	1.69	1.74	1.79	1.77	1.81	1.86	1.92	1.88	1.92	1.98	2.04	1.97	2.01	2.08	2.14	2.05	2.10	2.16	2.23	2.12	2.17	2.24	2.31
		Amps	5.9	6.1	6.3	6.5	6.4	6.6	6.8	7.0	7.0	7.1	7.4	7.6	7.4	7.6	7.9	8.2	7.9	8.1	8.4	8.7	8.4	8.6	8.9	9.2
		Hi PR	233	251	265	276	261	281	297	310	297	320	338	352	339	364	385	401	381	410	433	452	421	453	478	499
		Lo PR	107	114	124	132	113	120	131	140	118	125	137	145	123	131	143	153	129	138	150	160	134	142	155	166
	700	MBh	21.3	21.7	22.7	24.2	20.8	21.2	22.2	23.7	20.3	20.7	21.7	23.1	19.8	20.2	21.1	22.5	18.8	19.2	20.1	21.4	17.4	17.7	18.6	19.8
		S/T	0.88	0.85	0.76	0.62	0.91	0.88	0.79	0.64	0.93	0.90	0.81	0.66	0.96	0.93	0.84	0.68	1.00	0.96	0.87	0.71	1.00	0.97	0.88	0.71
		ΔT	25	24	23	20	25	24	23	20	25	24	23	20	25	25	23	20	25	24	23	20	23	23	21	19
		kW	1.61	1.65	1.70	1.75	1.73	1.77	1.82	1.88	1.83	1.87	1.93	1.99	1.93	1.97	2.03	2.09	2.00	2.05	2.11	2.18	2.07	2.11	2.18	2.25
		Amps	5.8	5.9	6.1	6.3	6.2	6.4	6.6	6.8	6.8	6.9	7.2	7.4	7.2	7.4	7.7	7.9	7.7	7.9	8.1	8.5	8.2	8.4	8.6	9.0
		Hi PR	226	243	257	268	254	273	288	301	288	310	328	342	328	353	373	389	370	398	420	438	408	439	464	484
		Lo PR	104	110	121	128	110	117	127	136	114	121	132	141	120	127	139	148	126	134	146	155	130	138	151	161

IDB: Entering Indoor Dry Bulb Temperature

Shaded area reflects AHRI conditions

Amps = outdoor unit amps (comp.+fan)

High and low pressures are measured at the liquid and suction service valves.

kW = Total system power

			OUTDOOR AMBIENT TEMPERATURE																							
			65ºF				75ºF				85ºF				95ºF				105ºF				115ºF			
			ENTERING INDOOR WET BULB TEMPERATURE																							
IDB	AIRFLOW		59	63	67	71	59	63	67	71	59	63	67	71	59	63	67	71	59	63	67	71	59	63	67	71
70	875	MBh	24.9	25.8	28.3	-	24.4	25.2	27.7	-	23.8	24.6	27.0	-	23.2	24.0	26.3	-	22.0	22.8	25.0	-	20.4	21.2	23.2	-
		S/T	0.69	0.57	0.40	-	0.71	0.59	0.41	-	0.73	0.61	0.42	-	0.75	0.63	0.44	-	0.78	0.65	0.45	-	0.79	0.66	0.46	-
		Δ T	18	16	12	-	18	16	12	-	18	16	12	-	18	16	12	-	18	16	12	-	17	15	11	-
		kW	1.97	2.01	2.07	-	2.12	2.16	2.23	-	2.24	2.29	2.36	-	2.35	2.40	2.48	-	2.45	2.50	2.58	-	2.53	2.58	2.67	-
		Amps	7.2	7.4	7.7	-	7.8	8.0	8.3	-	8.5	8.7	9.0	-	9.1	9.4	9.7	-	9.7	10.0	10.3	-	10.3	10.6	10.9	-
		Hi PR	245	264	279	-	275	296	313	-	313	337	356	-	356	384	405	-	401	432	456	-	443	477	503	-
		Lo PR	104	111	121	-	110	117	128	-	114	122	133	-	120	128	140	-	126	134	146	-	130	139	151	-
	1050	MBh	27.0	28.0	30.7	-	26.4	27.4	30.0	-	25.8	26.7	29.3	-	25.1	26.1	28.5	-	23.9	24.7	27.1	-	22.1	22.9	25.1	-
		S/T	0.71	0.60	0.41	-	0.74	0.62	0.43	-	0.76	0.63	0.44	-	0.78	0.65	0.45	-	0.81	0.68	0.47	-	0.82	0.68	0.47	-
		Δ T	17	15	11	-	17	15	11	-	17	15	11	-	17	15	11	-	17	15	11	-	16	14	10	-
		kW	2.02	2.06	2.12	-	2.17	2.21	2.28	-	2.30	2.35	2.42	-	2.41	2.46	2.54	-	2.51	2.56	2.64	-	2.59	2.65	2.73	-
		Amps	7.4	7.6	7.9	-	8.1	8.3	8.5	-	8.8	9.0	9.3	-	9.4	9.6	10.0	-	10.0	10.3	10.6	-	10.6	10.9	11.3	-
		Hi PR	253	272	287	-	284	305	322	-	323	347	367	-	367	395	418	-	413	445	470	-	457	492	519	-
		Lo PR	107	114	125	-	114	121	132	-	118	126	137	-	124	132	144	-	130	138	151	-	134	143	156	-
	1125	MBh	27.3	28.3	31.0	-	26.7	27.6	30.3	-	26.0	27.0	29.5	-	25.4	26.3	28.8	-	24.1	25.0	27.4	-	22.3	23.2	25.4	-
		S/T	0.73	0.61	0.42	-	0.75	0.63	0.44	-	0.77	0.65	0.45	-	0.80	0.67	0.46	-	0.83	0.69	0.48	-	0.83	0.70	0.48	-
		Δ T	16	14	11	-	16	14	11	-	16	14	11	-	17	14	11	-	16	14	11	-	15	13	10	-
		kW	2.02	2.07	2.13	-	2.17	2.22	2.28	-	2.30	2.35	2.42	-	2.42	2.47	2.55	-	2.52	2.57	2.65	-	2.60	2.66	2.74	-
		Amps	7.5	7.7	7.9	-	8.1	8.3	8.6	-	8.8	9.0	9.3	-	9.4	9.7	10.0	-	10.0	10.3	10.6	-	10.6	10.9	11.3	-
		Hi PR	254	273	288	-	285	306	323	-	324	348	368	-	369	397	419	-	415	446	471	-	458	493	521	-
		Lo PR	108	115	125	-	114	121	132	-	118	126	137	-	124	132	144	-	130	139	151	-	135	143	157	-
75	875	MBh	25.4	26.1	28.3	30.3	24.8	25.5	27.6	29.6	24.2	24.9	26.9	28.9	23.6	24.3	26.3	28.2	22.4	23.1	25.0	26.8	20.8	21.4	23.1	24.8
		S/T	0.78	0.70	0.53	0.34	0.81	0.72	0.55	0.35	0.83	0.74	0.56	0.36	0.86	0.77	0.58	0.37	0.89	0.80	0.60	0.39	0.90	0.80	0.61	0.39
		Δ T	21	19	16	11	21	19	16	11	21	19	16	11	21	20	16	11	21	19	16	11	20	18	15	10
		kW	1.99	2.03	2.09	2.15	2.13	2.18	2.24	2.31	2.26	2.31	2.38	2.45	2.37	2.42	2.50	2.58	2.47	2.52	2.60	2.69	2.55	2.61	2.69	2.78
		Amps	7.3	7.5	7.7	8.0	7.9	8.1	8.4	8.7	8.6	8.8	9.1	9.5	9.2	9.4	9.8	10.1	9.8	10.1	10.4	10.8	10.4	10.7	11.0	11.5
		Hi PR	248	267	282	294	278	299	316	329	316	340	359	375	360	387	409	427	405	436	460	480	448	482	509	530
		Lo PR	105	112	122	130	111	118	129	138	116	123	134	143	121	129	141	150	127	135	148	157	132	140	153	163
	1050	MBh	27.5	28.3	30.6	32.9	26.8	27.6	29.9	32.1	26.2	27.0	29.2	31.3	25.6	**26.3**	28.5	30.6	24.3	25.0	27.1	29.0	22.5	23.2	25.1	26.9
		S/T	0.81	0.72	0.55	0.35	0.84	0.75	0.57	0.37	0.86	0.77	0.58	0.37	0.89	**0.79**	0.60	0.39	0.92	0.82	0.62	0.40	0.93	0.83	0.63	0.41
		Δ T	19	18	15	10	20	18	15	10	20	18	15	10	20	**18**	15	10	20	18	15	10	18	17	14	10
		kW	2.04	2.08	2.14	2.20	2.18	2.23	2.30	2.37	2.32	2.36	2.44	2.51	2.43	**2.48**	2.56	2.64	2.53	2.58	2.67	2.75	2.61	2.67	2.76	2.85
		Amps	7.5	7.7	8.0	8.3	8.1	8.3	8.6	9.0	8.9	9.1	9.4	9.7	9.5	**9.7**	10.1	10.4	10.1	10.4	10.7	11.1	10.7	11.0	11.4	11.8
		Hi PR	255	275	290	303	287	308	326	340	326	351	370	386	371	**399**	422	440	418	449	475	495	461	497	524	547
		Lo PR	109	115	126	134	115	122	133	142	119	127	138	147	125	**133**	145	155	131	140	152	162	136	144	158	168
	1125	MBh	27.8	28.6	30.9	33.2	27.1	27.9	30.2	32.4	26.5	27.2	29.5	31.6	25.8	26.6	28.8	30.9	24.5	25.3	27.3	29.3	22.7	23.4	25.3	27.2
		S/T	0.83	0.74	0.56	0.36	0.86	0.77	0.58	0.37	0.88	0.79	0.59	0.38	0.91	0.81	0.61	0.39	0.94	0.84	0.64	0.41	0.95	0.85	0.64	0.41
		Δ T	19	17	14	10	19	17	14	10	19	17	14	10	19	18	14	10	19	17	14	10	18	16	13	9
		kW	2.04	2.08	2.14	2.21	2.19	2.23	2.30	2.37	2.32	2.37	2.44	2.52	2.44	2.49	2.57	2.65	2.54	2.59	2.67	2.76	2.62	2.68	2.76	2.85
		Amps	7.5	7.7	8.0	8.3	8.2	8.4	8.6	9.0	8.9	9.1	9.4	9.8	9.5	9.7	10.1	10.5	10.1	10.4	10.7	11.2	10.7	11.0	11.4	11.8
		Hi PR	256	276	291	304	287	309	327	341	327	352	371	387	372	401	423	441	419	451	476	496	463	498	526	549
		Lo PR	109	116	126	135	115	122	134	142	120	127	139	148	126	134	146	155	132	140	153	163	136	145	158	168

IDB: Entering Indoor Dry Bulb Temperature

Shaded area reflects ACCA (TVA) conditions

Amps = outdoor unit amps (comp.+fan)

High and low pressures are measured at the liquid and suction service valves.

kW = Total system power

			Outdoor Ambient Temperature																							
			65ºF				75ºF				85ºF				95ºF				105ºF				115ºF			
			Entering Indoor Wet Bulb Temperature																							
IDB	Airflow		59	63	67	71	59	63	67	71	59	63	67	71	59	63	67	71	59	63	67	71	59	63	67	71
80	875	MBh	25.8	26.4	28.2	30.1	25.2	25.8	27.5	29.4	24.6	25.1	26.9	28.7	24.0	24.5	26.2	28.0	22.8	23.3	24.9	26.6	21.1	21.6	23.1	24.7
		S/T	0.86	0.80	0.65	0.5	0.89	0.83	0.68	0.51	0.91	0.85	0.70	0.5	0.94	0.88	0.72	0.54	0.98	0.91	0.74	0.6	0.98	0.92	0.75	0.56
		Δ T	23	22	19	15	24	23	20	16	24	23	20	16	24	23	20	16	23	22	19	16	22	21	18	15
		kW	2.00	2.04	2.11	2.2	2.15	2.19	2.26	2.33	2.28	2.33	2.40	2.5	2.39	2.44	2.52	2.60	2.49	2.54	2.62	2.7	2.57	2.63	2.71	2.80
		Amps	7.4	7.6	7.8	8.1	8.0	8.2	8.5	8.8	8.7	8.9	9.2	9.6	9.3	9.5	9.9	10.2	9.9	10.2	10.5	10.9	10.5	10.8	11.1	11.6
		Hi PR	250	269	284	296.6	281	302	319	333	319	344	363	378.5	364	391	413	431	409	440	465	485.0	452	487	514	536
		Lo PR	106	113	124	131.6	112	120	131	139	117	124	136	144.5	123	131	142	152	129	137	149	159.0	133	141	154	165
	1050	MBh	28.0	28.6	30.5	32.6	27.3	27.9	29.8	31.9	26.7	27.2	29.1	31.1	26.0	26.6	**28.4**	30.4	24.7	25.3	27.0	28.8	22.9	23.4	25.0	26.7
		S/T	0.89	0.83	0.68	0.5	0.92	0.86	0.70	0.53	0.94	0.89	0.72	0.5	0.97	0.91	**0.74**	0.56	1.00	0.95	0.77	0.6	1.00	0.96	0.78	0.58
		Δ T	22	21	18	14	22	21	18	15	22	21	18	15	22	21	**19**	15	22	21	18	15	20	20	17	14
		kW	2.05	2.09	2.16	2.2	2.20	2.25	2.32	2.39	2.33	2.38	2.46	2.5	2.45	2.50	**2.58**	2.67	2.55	2.60	2.69	2.8	2.64	2.69	2.78	2.87
		Amps	7.6	7.8	8.0	8.3	8.2	8.4	8.7	9.0	8.9	9.2	9.5	9.8	9.6	9.8	**10.1**	10.5	10.2	10.5	10.8	11.2	10.8	11.1	11.5	11.9
		Hi PR	258	278	293	305.8	289	312	329	343	329	354	374	390.2	375	404	**426**	444	422	454	479	500.0	466	502	530	552
		Lo PR	110	117	127	135.6	116	123	135	143	120	128	140	148.9	126	135	**147**	156	133	141	154	164.0	137	146	159	170
	1125	MBh	28.2	28.9	30.8	33.0	27.6	28.2	30.1	32.2	26.9	27.5	29.4	31.4	26.3	26.8	28.7	30.7	25.0	25.5	27.2	29.1	23.1	23.6	25.2	27.0
		S/T	0.91	0.85	0.69	0.5	0.94	0.88	0.72	0.54	0.96	0.90	0.74	0.5	1.00	0.93	0.76	0.57	1.00	0.97	0.79	0.6	1.00	0.98	0.79	0.59
		Δ T	21	20	17	14	21	20	18	14	21	20	18	14	21	20	18	14	20	20	18	14	19	19	16	13
		kW	2.06	2.10	2.16	2.2	2.21	2.25	2.32	2.39	2.34	2.39	2.46	2.5	2.46	2.51	2.59	2.67	2.56	2.61	2.69	2.8	2.64	2.70	2.79	2.88
		Amps	7.6	7.8	8.1	8.4	8.2	8.4	8.7	9.1	9.0	9.2	9.5	9.9	9.6	9.8	10.2	10.6	10.2	10.5	10.8	11.3	10.9	11.1	11.5	12.0
		Hi PR	259	278	294	306.7	290	312	330	344	330	355	375	391.4	376	405	427	446	423	455	481	501.5	467	503	531	554
		Lo PR	110	117	128	136.0	116	124	135	144	121	128	140	149.4	127	135	147	157	133	141	154	164.4	138	146	160	170
85	875	MBh	26.3	26.8	28.0	29.9	25.7	26.1	27.4	29.2	25.0	25.5	26.7	28.5	24.4	24.9	26.1	27.8	23.2	23.7	24.8	26.4	21.5	21.9	23.0	24.5
		S/T	0.90	0.87	0.78	0.63	0.93	0.90	0.81	0.66	0.95	0.92	0.83	0.67	0.99	0.95	0.86	0.70	1.00	0.99	0.89	0.72	1.00	0.99	0.90	0.73
		Δ T	25	24	23	20	25	25	23	20	25	25	23	20	25	25	24	20	24	25	23	20	23	23	22	19
		kW	2.02	2.06	2.12	2.19	2.17	2.21	2.28	2.35	2.30	2.34	2.42	2.49	2.41	2.46	2.54	2.62	2.51	2.56	2.64	2.73	2.59	2.65	2.73	2.82
		Amps	7.4	7.6	7.9	8.2	8.1	8.3	8.5	8.9	8.8	9.0	9.3	9.7	9.4	9.6	10.0	10.3	10.0	10.3	10.6	11.0	10.6	10.9	11.3	11.7
		Hi PR	253	272	287	300	284	305	322	336	323	347	367	382	367	395	417	435	413	445	470	490	457	491	519	541
		Lo PR	107	114	125	133	114	121	132	140	118	126	137	146	124	132	144	153	130	138	151	161	134	143	156	166
	1050	MBh	28.5	29.0	30.4	32.4	27.8	28.3	29.7	31.7	27.1	27.7	29.0	30.9	26.5	27.0	28.3	30.1	25.1	25.6	26.8	28.6	23.3	23.7	24.9	26.5
		S/T	0.93	0.90	0.81	0.66	0.97	0.93	0.84	0.68	0.99	0.96	0.86	0.70	1.00	0.99	0.89	0.72	1.00	1.00	0.92	0.75	1.00	1.00	0.93	0.76
		Δ T	23	23	22	19	23	23	22	19	24	23	22	19	23	23	22	19	22	22	22	19	20	21	20	18
		kW	2.07	2.11	2.17	2.24	2.22	2.26	2.33	2.41	2.35	2.40	2.48	2.56	2.47	2.52	2.60	2.69	2.57	2.63	2.71	2.80	2.66	2.71	2.80	2.89
		Amps	7.7	7.8	8.1	8.4	8.3	8.5	8.8	9.1	9.0	9.3	9.6	9.9	9.7	9.9	10.2	10.6	10.3	10.6	10.9	11.3	10.9	11.2	11.6	12.0
		Hi PR	261	280	296	309	292	315	332	347	333	358	378	394	379	408	430	449	426	458	484	505	471	507	535	558
		Lo PR	111	118	129	137	117	124	136	145	122	129	141	150	128	136	148	158	134	142	155	166	138	147	161	171
	1125	MBh	28.7	29.3	30.7	32.7	28.1	28.6	30.0	32.0	27.4	27.9	29.3	31.2	26.7	27.3	28.5	30.4	25.4	25.9	27.1	28.9	23.5	24.0	25.1	26.8
		S/T	0.95	0.92	0.83	0.67	0.98	0.95	0.86	0.70	1.00	0.97	0.88	0.71	1.00	1.00	0.91	0.74	1.00	1.00	0.94	0.76	1.00	1.00	0.95	0.77
		Δ T	22	22	21	18	23	22	21	18	22	22	21	18	22	22	21	18	21	21	21	18	19	20	19	17
		kW	2.07	2.11	2.18	2.24	2.22	2.27	2.34	2.41	2.36	2.41	2.48	2.56	2.48	2.53	2.61	2.69	2.58	2.63	2.72	2.80	2.66	2.72	2.81	2.90
		Amps	7.7	7.9	8.1	8.4	8.3	8.5	8.8	9.1	9.1	9.3	9.6	10.0	9.7	9.9	10.3	10.7	10.3	10.6	10.9	11.4	11.0	11.2	11.6	12.1
		Hi PR	261	281	297	310	293	316	333	348	334	359	379	395	380	409	432	450	427	460	486	506	472	508	537	560
		Lo PR	111	118	129	137	117	125	136	145	122	130	142	151	128	136	149	158	134	143	156	166	139	148	161	172

IDB: Entering Indoor Dry Bulb Temperature

Shaded area reflects AHRI conditions

Amps = outdoor unit amps (comp.+fan)

High and low pressures are measured at the liquid and suction service valves.

kW = Total system power

			OUTDOOR AMBIENT TEMPERATURE																							
			65ºF				75ºF				85ºF				95ºF				105ºF				115ºF			
			ENTERING INDOOR WET BULB TEMPERATURE																							
IDB	AIRFLOW		59	63	67	71	59	63	67	71	59	63	67	71	59	63	67	71	59	63	67	71	59	63	67	71
70	1050	MBh	29.5	30.6	33.5	-	28.8	29.9	32.7	-	28.1	29.2	31.9	-	27.4	28.4	31.2	-	26.1	27.0	29.6	-	24.2	25.0	27.4	-
		S/T	0.68	0.57	0.39	-	0.70	0.59	0.41	-	0.72	0.60	0.42	-	0.75	0.62	0.43	-	0.77	0.65	0.45	-	0.78	0.65	0.45	-
		Δ T	18	15	12	-	18	15	12	-	18	15	12	-	18	16	12	-	18	15	12	-	17	14	11	-
		kW	2.32	2.37	2.44	-	2.49	2.55	2.63	-	2.65	2.70	2.79	-	2.78	2.84	2.93	-	2.89	2.96	3.05	-	2.99	3.06	3.16	-
		Amps	8.5	8.7	9.0	-	9.2	9.5	9.8	-	10.1	10.3	10.7	-	10.8	11.1	11.4	-	11.5	11.8	12.2	-	12.2	12.5	13.0	-
		Hi PR	235	252	267	-	263	283	299	-	299	322	340	-	341	367	387	-	384	413	436	-	424	456	482	-
		Lo PR	101	107	117	-	107	113	124	-	111	118	129	-	116	124	135	-	122	130	142	-	126	134	146	-
	1200	MBh	32.0	33.1	36.3	-	31.2	32.4	35.5	-	30.5	31.6	34.6	-	29.7	30.8	33.8	-	28.2	29.3	32.1	-	26.2	27.1	29.7	-
		S/T	0.71	0.59	0.41	-	0.73	0.61	0.42	-	0.75	0.63	0.43	-	0.77	0.65	0.45	-	0.80	0.67	0.46	-	0.81	0.68	0.47	-
		Δ T	17	15	11	-	17	15	11	-	17	15	11	-	18	15	12	-	17	15	11	-	16	14	11	-
		kW	2.38	2.43	2.50	-	2.56	2.61	2.69	-	2.71	2.77	2.86	-	2.85	2.91	3.00	-	2.97	3.03	3.13	-	3.07	3.14	3.24	-
		Amps	8.8	9.0	9.3	-	9.5	9.7	10.1	-	10.4	10.6	11.0	-	11.1	11.4	11.8	-	11.8	12.1	12.6	-	12.6	12.9	13.3	-
		Hi PR	242	260	275	-	271	292	308	-	309	332	351	-	352	378	399	-	395	426	449	-	437	470	497	-
		Lo PR	104	111	121	-	110	117	128	-	114	121	133	-	120	128	139	-	126	134	146	-	130	138	151	-
	1350	MBh	32.9	34.1	37.4	-	32.2	33.3	36.5	-	31.4	32.5	35.7	-	30.6	31.7	34.8	-	29.1	30.2	33.0	-	27.0	27.9	30.6	-
		S/T	0.74	0.62	0.43	-	0.77	0.64	0.44	-	0.79	0.66	0.45	-	0.81	0.68	0.47	-	0.84	0.70	0.49	-	0.85	0.71	0.49	-
		Δ T	17	14	11	-	17	15	11	-	17	15	11	-	17	15	11	-	17	14	11	-	16	13	10	-
		kW	2.40	2.45	2.52	-	2.58	2.63	2.71	-	2.73	2.79	2.88	-	2.87	2.93	3.03	-	2.99	3.06	3.16	-	3.09	3.16	3.26	-
		Amps	8.8	9.1	9.4	-	9.6	9.8	10.2	-	10.5	10.7	11.1	-	11.2	11.5	11.9	-	12.0	12.3	12.7	-	12.7	13.0	13.5	-
		Hi PR	244	263	278	-	274	295	311	-	312	335	354	-	355	382	403	-	399	430	454	-	441	475	501	-
		Lo PR	105	112	122	-	111	118	129	-	115	123	134	-	121	129	141	-	127	135	147	-	131	140	152	-
75	1050	MBh	30.0	30.9	33.4	35.9	29.3	30.2	32.7	35.1	28.6	29.5	31.9	34.2	27.9	28.7	31.1	33.4	26.5	27.3	29.6	31.7	24.6	25.3	27.4	29.4
		S/T	0.77	0.69	0.52	0.34	0.80	0.72	0.54	0.35	0.82	0.73	0.56	0.36	0.85	0.76	0.57	0.37	0.88	0.79	0.60	0.38	0.89	0.79	0.60	0.39
		Δ T	20	19	15	11	21	19	16	11	21	19	16	11	21	19	16	11	20	19	15	11	19	18	14	10
		kW	2.34	2.39	2.46	2.54	2.51	2.57	2.65	2.73	2.67	2.72	2.81	2.90	2.80	2.86	2.96	3.05	2.92	2.98	3.08	3.18	3.02	3.08	3.18	3.29
		Amps	8.6	8.8	9.1	9.5	9.3	9.6	9.9	10.3	10.2	10.4	10.8	11.2	10.9	11.2	11.6	12.0	11.6	11.9	12.3	12.8	12.3	12.6	13.1	13.6
		Hi PR	237	255	269	281	266	286	302	315	302	325	344	358	344	371	391	408	388	417	440	459	428	461	487	507
		Lo PR	102	108	118	126	108	114	125	133	112	119	130	138	117	125	136	145	123	131	143	152	127	135	148	158
	1200	MBh	32.5	33.5	36.2	38.9	31.8	32.7	35.4	38.0	31.0	31.9	34.5	37.1	30.2	**31.1**	33.7	36.2	28.7	29.6	32.0	34.4	26.6	27.4	29.7	31.8
		S/T	0.80	0.72	0.54	0.35	0.83	0.74	0.56	0.36	0.85	0.76	0.58	0.37	0.88	**0.79**	0.60	0.38	0.91	0.82	0.62	0.40	0.92	0.82	0.62	0.40
		Δ T	20	18	15	10	20	19	15	11	20	19	15	11	20	**19**	15	11	20	18	15	10	19	17	14	10
		kW	2.40	2.45	2.52	2.60	2.58	2.63	2.71	2.80	2.73	2.79	2.88	2.97	2.87	**2.94**	3.03	3.13	2.99	3.06	3.16	3.26	3.09	3.16	3.27	3.37
		Amps	8.8	9.1	9.4	9.7	9.6	9.8	10.2	10.6	10.5	10.7	11.1	11.5	11.2	**11.5**	11.9	12.4	12.0	12.3	12.7	13.2	12.7	13.0	13.5	14.0
		Hi PR	244	263	278	290	274	295	312	325	312	336	354	370	355	**382**	404	421	399	430	454	473	441	475	502	523
		Lo PR	105	112	122	130	111	118	129	137	115	123	134	143	121	**129**	141	150	127	135	147	157	131	140	152	162
	1350	MBh	33.5	34.5	37.3	40.0	32.7	33.7	36.4	39.1	31.9	32.9	35.6	38.2	31.1	32.1	34.7	37.3	29.6	30.5	33.0	35.4	27.4	28.2	30.5	32.8
		S/T	0.84	0.75	0.57	0.37	0.87	0.78	0.59	0.38	0.89	0.80	0.60	0.39	0.92	0.82	0.62	0.40	0.96	0.86	0.65	0.42	0.96	0.86	0.65	0.42
		Δ T	19	18	14	10	19	18	15	10	19	18	15	10	20	18	15	10	19	18	15	10	18	17	14	9
		kW	2.41	2.46	2.54	2.62	2.60	2.65	2.73	2.82	2.76	2.81	2.90	3.00	2.90	2.96	3.05	3.15	3.02	3.08	3.18	3.29	3.12	3.19	3.29	3.40
		Amps	8.9	9.2	9.5	9.8	9.7	9.9	10.3	10.7	10.6	10.8	11.2	11.6	11.3	11.6	12.0	12.5	12.1	12.4	12.8	13.3	12.8	13.2	13.6	14.1
		Hi PR	247	266	280	292	277	298	315	328	315	339	358	373	359	386	408	425	403	434	459	478	446	480	507	528
		Lo PR	106	113	123	131	112	119	130	139	116	124	135	144	122	130	142	151	128	136	149	159	133	141	154	164

IDB: Entering Indoor Dry Bulb Temperature

Shaded area reflects ACCA (TVA) conditions

Amps = outdoor unit amps (comp.+fan)

High and low pressures are measured at the liquid and suction service valves.

kW = Total system power

			OUTDOOR AMBIENT TEMPERATURE																							
			65ºF				75ºF				85ºF				95ºF				105ºF				115ºF			
			ENTERING INDOOR WET BULB TEMPERATURE																							
IDB	AIRFLOW		59	63	67	71	59	63	67	71	59	63	67	71	59	63	67	71	59	63	67	71	59	63	67	71
80	1050	MBh	30.5	31.2	33.3	35.6	29.8	30.5	32.6	34.8	29.1	29.8	31.8	34.0	28.4	29.0	31.0	33.2	27.0	27.6	29.5	31.5	25.0	25.5	27.3	29.2
		S/T	0.85	0.79	0.65	0.5	0.88	0.82	0.67	0.50	0.90	0.84	0.69	0.5	0.93	0.87	0.71	0.53	0.96	0.90	0.74	0.6	0.97	0.91	0.74	0.56
		Δ T	23	22	19	15	23	22	19	15	23	22	19	15	23	22	19	15	23	22	19	15	21	20	18	14
		kW	2.36	2.41	2.48	2.6	2.53	2.59	2.67	2.75	2.69	2.75	2.83	2.9	2.83	2.89	2.98	3.08	2.94	3.01	3.10	3.2	3.04	3.11	3.21	3.32
		Amps	8.7	8.9	9.2	9.6	9.4	9.7	10.0	10.4	10.3	10.5	10.9	11.3	11.0	11.3	11.7	12.1	11.7	12.0	12.4	12.9	12.5	12.8	13.2	13.7
		Hi PR	239	258	272	283.7	269	289	305	318	305	329	347	362.1	348	374	395	412	391	421	445	463.9	432	465	491	513
		Lo PR	103	109	120	127.3	109	116	126	134	113	120	131	139.8	119	126	138	147	124	132	144	153.8	129	137	149	159
	1200	MBh	33.1	33.8	36.1	38.6	32.3	33.0	35.3	37.7	31.5	32.2	34.4	36.8	30.8	31.4	**33.6**	35.9	29.2	29.9	31.9	34.1	27.1	27.7	29.6	31.6
		S/T	0.88	0.82	0.67	0.5	0.91	0.85	0.70	0.52	0.93	0.88	0.71	0.5	0.96	0.90	**0.74**	0.55	1.00	0.94	0.76	0.6	1.00	0.95	0.77	0.58
		Δ T	22	21	19	15	23	22	19	15	23	22	19	15	23	22	**19**	15	22	21	19	15	21	20	17	14
		kW	2.42	2.46	2.54	2.6	2.60	2.65	2.73	2.82	2.76	2.81	2.90	3.0	2.90	2.96	**3.05**	3.15	3.02	3.08	3.18	3.3	3.12	3.19	3.29	3.40
		Amps	8.9	9.2	9.5	9.8	9.7	9.9	10.3	10.7	10.6	10.8	11.2	11.6	11.3	11.6	**12.0**	12.5	12.1	12.4	12.8	13.3	12.8	13.2	13.6	14.1
		Hi PR	247	266	280	292.5	277	298	315	328	315	339	358	373.3	359	386	**408**	425	404	434	459	478.3	446	480	507	528
		Lo PR	106	113	123	131.2	112	119	130	139	116	124	135	144.1	122	130	**142**	151	128	136	149	158.6	133	141	154	164
	1350	MBh	34.1	34.8	37.2	39.8	33.3	34.0	36.3	38.8	32.5	33.2	35.5	37.9	31.7	32.4	34.6	37.0	30.1	30.8	32.9	35.1	27.9	28.5	30.5	32.6
		S/T	0.92	0.86	0.70	0.5	0.96	0.90	0.73	0.54	1.00	0.92	0.75	0.6	1.00	0.95	0.77	0.58	1.00	1.00	0.80	0.6	1.00	1.00	0.81	0.60
		Δ T	21	20	18	14	22	21	18	14	22	21	18	14	22	21	18	15	21	21	18	14	19	19	17	13
		kW	2.43	2.48	2.56	2.6	2.62	2.67	2.76	2.84	2.78	2.84	2.93	3.0	2.92	2.98	3.08	3.18	3.04	3.11	3.21	3.3	3.15	3.21	3.32	3.43
		Amps	9.0	9.2	9.6	9.9	9.8	10.0	10.4	10.8	10.7	10.9	11.3	11.8	11.4	11.7	12.1	12.6	12.2	12.5	12.9	13.4	12.9	13.3	13.7	14.3
		Hi PR	249	268	283	295.4	280	301	318	331	318	342	361	377.0	362	390	412	429	408	439	463	483.1	450	485	512	534
		Lo PR	107	114	124	132.5	113	120	131	140	118	125	137	145.5	124	131	144	153	130	138	150	160.2	134	143	156	166
85	1050	MBh	31.1	31.7	33.2	35.4	30.3	30.9	32.4	34.6	29.6	30.2	31.6	33.7	28.9	29.5	30.9	32.9	27.5	28.0	29.3	31.3	25.4	25.9	27.2	29.0
		S/T	0.89	0.86	0.77	0.63	0.92	0.89	0.80	0.65	0.94	0.91	0.82	0.67	0.97	0.94	0.85	0.69	1.00	0.98	0.88	0.71	1.00	0.98	0.89	0.72
		Δ T	24	24	22	19	24	24	23	20	24	24	23	20	25	24	23	20	24	24	23	20	22	22	21	18
		kW	2.38	2.43	2.50	2.58	2.55	2.61	2.69	2.77	2.71	2.77	2.86	2.95	2.85	2.91	3.00	3.10	2.97	3.03	3.13	3.23	3.07	3.13	3.24	3.34
		Amps	8.8	9.0	9.3	9.6	9.5	9.7	10.1	10.5	10.4	10.6	11.0	11.4	11.1	11.4	11.8	12.2	11.8	12.1	12.6	13.1	12.6	12.9	13.3	13.9
		Hi PR	242	260	275	287	271	292	308	322	309	332	351	366	351	378	399	416	395	425	449	469	437	470	496	518
		Lo PR	104	111	121	129	110	117	128	136	114	121	133	141	120	128	139	148	126	134	146	155	130	138	151	161
	1200	MBh	33.7	34.3	35.9	38.3	32.9	33.5	35.1	37.5	32.1	32.7	34.3	36.6	31.3	31.9	33.4	35.7	29.7	30.3	31.8	33.9	27.6	28.1	29.4	31.4
		S/T	0.92	0.89	0.80	0.65	0.95	0.92	0.83	0.67	0.98	0.94	0.85	0.69	1.00	0.98	0.88	0.71	1.00	1.00	0.91	0.74	1.00	1.00	0.92	0.75
		Δ T	24	23	22	19	24	24	22	19	24	24	22	19	24	24	23	20	23	23	22	19	21	22	21	18
		kW	2.43	2.48	2.56	2.64	2.62	2.67	2.76	2.84	2.78	2.84	2.93	3.02	2.92	2.98	3.08	3.18	3.04	3.11	3.21	3.32	3.15	3.21	3.32	3.43
		Amps	9.0	9.2	9.6	9.9	9.8	10.0	10.4	10.8	10.7	10.9	11.3	11.8	11.4	11.7	12.1	12.6	12.2	12.5	12.9	13.4	12.9	13.3	13.7	14.3
		Hi PR	249	268	283	295	280	301	318	331	318	342	361	377	362	390	412	429	408	439	463	483	450	485	512	534
		Lo PR	107	114	124	133	113	120	131	140	118	125	137	146	124	131	144	153	130	138	150	160	134	143	156	166
	1350	MBh	34.7	35.3	37.0	39.5	33.9	34.5	36.2	38.6	33.1	33.7	35.3	37.7	32.3	32.9	34.4	36.7	30.6	31.2	32.7	34.9	28.4	28.9	30.3	32.3
		S/T	0.97	0.93	0.84	0.68	1.00	0.97	0.87	0.71	1.00	0.99	0.89	0.73	1.00	1.00	0.92	0.75	1.00	1.00	0.96	0.78	1.00	1.00	0.97	0.78
		Δ T	23	22	21	18	23	23	21	19	23	23	21	19	22	22	22	19	21	21	21	18	19	20	20	17
		kW	2.45	2.50	2.58	2.66	2.64	2.69	2.78	2.87	2.80	2.86	2.95	3.05	2.94	3.01	3.10	3.21	3.07	3.13	3.24	3.34	3.17	3.24	3.35	3.46
		Amps	9.1	9.3	9.7	10.0	9.9	10.1	10.5	10.9	10.8	11.0	11.4	11.9	11.5	11.8	12.2	12.7	12.3	12.6	13.1	13.6	13.1	13.4	13.9	14.4
		Hi PR	252	271	286	298	282	304	321	335	321	346	365	381	366	394	416	434	412	443	468	488	455	489	517	539
		Lo PR	108	115	126	134	114	122	133	141	119	126	138	147	125	133	145	154	131	139	152	162	135	144	157	167

IDB: Entering Indoor Dry Bulb Temperature

Shaded area reflects AHRI conditions

Amps = outdoor unit amps (comp.+fan)

High and low pressures are measured at the liquid and suction service valves.

kW = Total system power

			OUTDOOR AMBIENT TEMPERATURE																							
			65ºF				75ºF				85ºF				95ºF				105ºF				115ºF			
			ENTERING INDOOR WET BULB TEMPERATURE																							
IDB	AIRFLOW		59	63	67	71	59	63	67	71	59	63	67	71	59	63	67	71	59	63	67	71	59	63	67	71
70	1225	MBh	35.1	36.4	39.9	-	34.3	35.6	39.0	-	33.5	34.7	38.0	-	32.7	33.9	37.1	-	31.0	32.2	35.2	-	28.8	29.8	32.7	-
		S/T	0.72	0.60	0.42	-	0.75	0.63	0.43	-	0.77	0.64	0.45	-	0.79	0.66	0.46	-	0.82	0.69	0.48	-	0.83	0.69	0.48	-
		Δ T	19	17	13	-	19	17	13	-	19	17	13	-	19	17	13	-	19	17	13	-	18	16	12	-
		kW	2.81	2.86	2.94	-	3.00	3.06	3.15	-	3.17	3.24	3.33	-	3.33	3.39	3.50	-	3.45	3.53	3.63	-	3.57	3.64	3.75	-
		Amps	10.3	10.6	10.9	-	11.1	11.4	11.8	-	12.1	12.4	12.8	-	12.9	13.2	13.7	-	13.7	14.1	14.5	-	14.5	14.9	15.4	-
		Hi PR	220	237	250	-	247	266	281	-	281	302	319	-	320	344	363	-	360	387	409	-	398	428	452	-
		Lo PR	101	107	117	-	107	113	124	-	111	118	129	-	116	124	135	-	122	130	142	-	126	134	147	-
	1400	MBh	38.1	39.4	43.2	-	37.2	38.5	42.2	-	36.3	37.6	41.2	-	35.4	36.7	40.2	-	33.6	34.9	38.2	-	31.2	32.3	35.4	-
		S/T	0.75	0.63	0.43	-	0.78	0.65	0.45	-	0.80	0.67	0.46	-	0.82	0.69	0.48	-	0.86	0.71	0.49	-	0.86	0.72	0.50	-
		Δ T	19	16	12	-	19	16	12	-	19	16	12	-	19	17	13	-	19	16	12	-	18	15	12	-
		kW	2.87	2.92	3.01	-	3.07	3.13	3.22	-	3.25	3.31	3.41	-	3.40	3.47	3.58	-	3.54	3.61	3.72	-	3.65	3.73	3.84	-
		Amps	10.6	10.9	11.2	-	11.5	11.7	12.1	-	12.4	12.7	13.1	-	13.3	13.6	14.0	-	14.1	14.5	14.9	-	15.0	15.3	15.8	-
		Hi PR	227	244	258	-	255	274	289	-	289	312	329	-	330	355	375	-	371	399	421	-	410	441	466	-
		Lo PR	104	111	121	-	110	117	128	-	114	122	133	-	120	128	139	-	126	134	146	-	130	138	151	-
	1575	MBh	39.2	40.6	44.5	-	38.3	39.7	43.5	-	37.4	38.7	42.4	-	36.5	37.8	41.4	-	34.6	35.9	39.3	-	32.1	33.3	36.4	-
		S/T	0.79	0.66	0.46	-	0.82	0.68	0.47	-	0.84	0.70	0.48	-	0.86	0.72	0.50	-	0.90	0.75	0.52	-	0.90	0.76	0.52	-
		Δ T	18	16	12	-	18	16	12	-	18	16	12	-	18	16	12	-	18	16	12	-	17	15	11	-
		kW	2.89	2.94	3.03	-	3.09	3.15	3.25	-	3.27	3.34	3.44	-	3.43	3.50	3.61	-	3.56	3.64	3.75	-	3.68	3.76	3.87	-
		Amps	10.7	11.0	11.3	-	11.6	11.8	12.2	-	12.5	12.8	13.3	-	13.4	13.7	14.2	-	14.2	14.6	15.1	-	15.1	15.5	16.0	-
		Hi PR	229	247	260	-	257	277	292	-	292	315	332	-	333	358	378	-	375	403	426	-	414	445	470	-
		Lo PR	105	112	122	-	111	118	129	-	115	123	134	-	121	129	141	-	127	135	148	-	131	140	153	-
75	1225	MBh	35.7	36.8	39.8	42.7	34.9	35.9	38.9	41.7	34.1	35.1	38.0	40.7	33.2	34.2	37.0	39.7	31.6	32.5	35.2	37.8	29.2	30.1	32.6	35.0
		S/T	0.82	0.74	0.56	0.36	0.85	0.76	0.58	0.37	0.87	0.78	0.59	0.38	0.90	0.81	0.61	0.39	0.94	0.84	0.63	0.41	0.95	0.85	0.64	0.41
		Δ T	22	20	17	11	22	21	17	12	22	21	17	12	23	21	17	12	22	20	17	12	21	19	16	11
		kW	2.83	2.88	2.96	3.05	3.02	3.08	3.17	3.27	3.20	3.26	3.36	3.46	3.35	3.42	3.52	3.63	3.48	3.55	3.66	3.78	3.59	3.67	3.78	3.90
		Amps	10.4	10.7	11.0	11.4	11.2	11.5	11.9	12.3	12.2	12.5	12.9	13.4	13.0	13.3	13.8	14.3	13.9	14.2	14.7	15.2	14.7	15.0	15.5	16.1
		Hi PR	222	239	253	263	249	268	283	296	284	305	322	336	323	348	367	383	363	391	413	431	402	432	456	476
		Lo PR	102	108	118	126	108	115	125	133	112	119	130	138	118	125	137	145	123	131	143	152	127	136	148	158
	1400	MBh	38.7	39.8	43.1	46.3	37.8	38.9	42.1	45.2	36.9	38.0	41.1	44.1	36.0	**37.1**	40.1	43.1	34.2	35.2	38.1	40.9	31.7	32.6	35.3	37.9
		S/T	0.85	0.76	0.58	0.37	0.88	0.79	0.60	0.39	0.91	0.81	0.61	0.40	0.94	**0.84**	0.63	0.41	0.97	0.87	0.66	0.42	0.98	0.88	0.66	0.43
		Δ T	22	20	16	11	22	20	17	11	22	20	17	11	22	**20**	17	12	22	20	16	11	20	19	15	11
		kW	2.89	2.95	3.03	3.12	3.09	3.15	3.25	3.35	3.27	3.34	3.44	3.54	3.43	**3.50**	3.61	3.72	3.57	3.64	3.75	3.87	3.68	3.76	3.88	4.00
		Amps	10.7	11.0	11.3	11.7	11.6	11.8	12.2	12.7	12.5	12.8	13.3	13.8	13.4	**13.7**	14.2	14.7	14.3	14.6	15.1	15.7	15.1	15.5	16.0	16.6
		Hi PR	229	247	260	272	257	277	292	305	292	315	332	347	333	**358**	378	395	375	403	426	444	414	446	470	491
		Lo PR	105	112	122	130	111	118	129	137	115	123	134	143	121	**129**	141	150	127	135	148	157	131	140	153	163
	1575	MBh	39.9	41.0	44.4	47.7	38.9	40.1	43.4	46.6	38.0	39.1	42.4	45.5	37.1	38.2	41.3	44.4	35.2	36.3	39.3	42.1	32.6	33.6	36.4	39.0
		S/T	0.90	0.80	0.61	0.39	0.93	0.83	0.63	0.40	0.95	0.85	0.64	0.41	0.98	0.88	0.66	0.43	1.00	0.91	0.69	0.44	1.00	0.92	0.70	0.45
		Δ T	21	19	16	11	21	19	16	11	21	19	16	11	21	20	16	11	21	19	16	11	19	18	15	10
		kW	2.91	2.97	3.05	3.14	3.12	3.18	3.27	3.37	3.30	3.36	3.47	3.57	3.46	3.53	3.64	3.75	3.59	3.67	3.78	3.90	3.71	3.79	3.91	4.03
		Amps	10.8	11.1	11.4	11.8	11.7	11.9	12.3	12.8	12.7	13.0	13.4	13.9	13.5	13.8	14.3	14.8	14.4	14.7	15.2	15.8	15.2	15.6	16.1	16.7
		Hi PR	231	249	263	274	260	279	295	308	295	318	336	350	336	362	382	399	378	407	430	449	418	450	475	496
		Lo PR	106	113	123	131	112	119	130	139	117	124	135	144	122	130	142	151	128	136	149	159	133	141	154	164

IDB: Entering Indoor Dry Bulb Temperature

Shaded area reflects ACCA (TVA) conditions

Amps = outdoor unit amps (comp.+fan)

High and low pressures are measured at the liquid and suction service valves.

kW = Total system power

			OUTDOOR AMBIENT TEMPERATURE																							
			65ºF				75ºF				85ºF				95ºF				105ºF				115ºF			
			ENTERING INDOOR WET BULB TEMPERATURE																							
IDB	AIRFLOW		59	63	67	71	59	63	67	71	59	63	67	71	59	63	67	71	59	63	67	71	59	63	67	71
80	1225	MBh	36.4	37.1	39.7	42.4	35.5	36.3	38.8	41.4	34.7	35.4	37.8	40.5	33.8	34.6	36.9	39.5	32.1	32.8	35.1	37.5	29.8	30.4	32.5	34.7
		S/T	0.90	0.85	0.69	0.5	0.94	0.88	0.71	0.53	0.96	0.90	0.73	0.5	0.99	0.93	0.76	0.57	1.03	0.96	0.78	0.6	1.04	0.97	0.79	0.59
		Δ T	25	24	21	16	25	24	21	17	25	24	21	17	25	24	21	17	25	24	21	17	23	22	19	15
		kW	2.85	2.90	2.98	3.1	3.05	3.11	3.20	3.29	3.22	3.29	3.39	3.5	3.38	3.45	3.55	3.66	3.51	3.58	3.69	3.8	3.62	3.70	3.81	3.93
		Amps	10.5	10.8	11.1	11.5	11.4	11.6	12.0	12.4	12.3	12.6	13.0	13.5	13.2	13.5	13.9	14.4	14.0	14.3	14.8	15.4	14.8	15.2	15.7	16.3
		Hi PR	225	242	255	266.1	252	271	286	299	287	308	326	339.6	326	351	371	387	367	395	417	435.1	406	437	461	481
		Lo PR	103	110	120	127.4	109	116	126	135	113	120	131	139.8	119	126	138	147	124	132	145	154.0	129	137	150	159
	1400	MBh	39.4	40.2	43.0	46.0	38.5	39.3	42.0	44.9	37.6	38.4	41.0	43.8	36.6	37.4	**40.0**	42.8	34.8	35.6	38.0	40.6	32.2	32.9	35.2	37.6
		S/T	0.94	0.88	0.71	0.5	0.97	0.91	0.74	0.55	1.00	0.93	0.76	0.6	1.00	0.96	**0.78**	0.59	1.00	1.00	0.81	0.6	1.00	1.00	0.82	0.61
		Δ T	24	23	20	16	25	23	20	16	25	24	20	16	24	24	**21**	16	23	23	20	16	21	22	19	15
		kW	2.91	2.97	3.05	3.1	3.12	3.18	3.27	3.37	3.30	3.36	3.47	3.6	3.46	3.53	**3.64**	3.75	3.59	3.67	3.78	3.9	3.71	3.79	3.91	4.03
		Amps	10.8	11.1	11.4	11.8	11.7	11.9	12.3	12.8	12.7	13.0	13.4	13.9	13.5	13.9	**14.3**	14.8	14.4	14.7	15.2	15.8	15.2	15.6	16.1	16.7
		Hi PR	231	249	263	274.3	260	279	295	308	295	318	336	350.1	336	362	**382**	399	378	407	430	448.6	418	450	475	496
		Lo PR	106	113	123	131.3	112	119	130	139	117	124	135	144.2	122	130	**142**	151	128	137	149	158.7	133	141	154	164
	1575	MBh	40.6	41.5	44.3	47.3	39.6	40.5	43.3	46.2	38.7	39.5	42.2	45.1	37.7	38.6	41.2	44.0	35.9	36.6	39.1	41.8	33.2	33.9	36.3	38.8
		S/T	1.00	0.92	0.75	0.6	1.00	0.95	0.78	0.58	1.00	1.00	0.80	0.6	1.00	1.00	0.82	0.61	1.00	1.00	0.85	0.6	1.00	1.00	0.86	0.64
		Δ T	24	22	19	15	23	23	20	16	23	23	20	16	22	23	20	16	21	21	19	16	19	20	18	15
		kW	2.93	2.99	3.08	3.2	3.14	3.20	3.30	3.40	3.32	3.39	3.49	3.6	3.48	3.56	3.66	3.78	3.62	3.70	3.81	3.9	3.74	3.82	3.94	4.06
		Amps	10.9	11.2	11.5	11.9	11.8	12.0	12.4	12.9	12.8	13.1	13.5	14.0	13.6	14.0	14.4	15.0	14.5	14.9	15.4	15.9	15.4	15.7	16.3	16.9
		Hi PR	234	252	266	277.1	262	282	298	311	298	321	339	353.6	340	366	386	403	382	411	434	453.1	422	455	480	501
		Lo PR	107	114	125	132.6	113	121	132	140	118	125	137	145.6	124	132	144	153	130	138	151	160.3	134	143	156	166
85	1225	MBh	37.0	37.7	39.5	42.1	36.1	36.8	38.6	41.2	35.3	36.0	37.7	40.2	34.4	35.1	36.7	39.2	32.7	33.3	34.9	37.2	30.3	30.9	32.3	34.5
		S/T	0.95	0.91	0.82	0.67	0.98	0.95	0.85	0.69	1.00	0.97	0.88	0.71	1.00	1.00	0.90	0.73	1.00	1.00	0.94	0.76	1.00	1.00	0.95	0.77
		Δ T	26	26	24	21	27	26	25	21	26	26	25	21	26	26	25	22	25	25	25	21	23	23	23	20
		kW	2.87	2.92	3.01	3.10	3.07	3.13	3.22	3.32	3.25	3.31	3.41	3.52	3.40	3.47	3.58	3.69	3.54	3.61	3.72	3.84	3.65	3.73	3.84	3.97
		Amps	10.6	10.9	11.2	11.6	11.5	11.7	12.1	12.6	12.4	12.7	13.1	13.6	13.3	13.6	14.0	14.6	14.1	14.5	14.9	15.5	14.9	15.3	15.8	16.4
		Hi PR	227	244	258	269	254	274	289	302	289	311	329	343	330	355	375	391	371	399	421	439	410	441	466	486
		Lo PR	104	111	121	129	110	117	128	136	114	121	133	141	120	128	139	148	126	134	146	155	130	138	151	161
	1400	MBh	40.1	40.9	42.8	45.6	39.1	39.9	41.8	44.6	38.2	39.0	40.8	43.5	37.3	38.0	39.8	42.5	35.4	36.1	37.8	40.3	32.8	33.4	35.0	37.4
		S/T	0.98	0.95	0.85	0.69	1.00	0.98	0.89	0.72	1.00	1.00	0.91	0.74	1.00	1.00	0.94	0.76	1.00	1.00	0.97	0.79	1.00	1.00	0.98	0.80
		Δ T	26	25	24	21	26	26	24	21	25	26	24	21	24	25	25	21	23	24	24	21	22	22	23	20
		kW	2.93	2.99	3.08	3.17	3.14	3.20	3.30	3.40	3.32	3.39	3.49	3.60	3.48	3.56	3.66	3.78	3.62	3.70	3.81	3.93	3.74	3.82	3.94	4.06
		Amps	10.9	11.2	11.5	11.9	11.8	12.0	12.4	12.9	12.8	13.1	13.5	14.0	13.6	14.0	14.4	15.0	14.5	14.9	15.4	15.9	15.4	15.7	16.3	16.9
		Hi PR	234	252	266	277	262	282	298	311	298	321	339	354	340	366	386	403	382	411	434	453	422	455	480	501
		Lo PR	107	114	125	133	113	121	132	140	118	125	137	146	124	132	144	153	130	138	151	160	134	143	156	166
	1575	MBh	41.3	42.1	44.1	47.0	40.3	41.1	43.0	45.9	39.4	40.1	42.0	44.8	38.4	39.1	41.0	43.7	36.5	37.2	38.9	41.5	33.8	34.4	36.1	38.5
		S/T	1.00	0.99	0.90	0.73	1.00	1.00	0.93	0.75	1.00	1.00	0.95	0.77	1.00	1.00	0.98	0.80	1.00	1.00	1.00	0.83	1.00	1.00	1.00	0.83
		Δ T	24	24	23	20	24	24	23	20	23	23	23	20	22	23	24	20	21	22	23	20	20	20	21	19
		kW	2.95	3.01	3.10	3.19	3.16	3.23	3.32	3.42	3.35	3.42	3.52	3.63	3.51	3.58	3.69	3.81	3.65	3.73	3.84	3.96	3.77	3.85	3.97	4.10
		Amps	11.0	11.3	11.6	12.0	11.9	12.2	12.6	13.0	12.9	13.2	13.6	14.1	13.8	14.1	14.6	15.1	14.6	15.0	15.5	16.1	15.5	15.9	16.4	17.1
		Hi PR	236	254	268	280	265	285	301	314	301	324	342	357	343	369	390	407	386	415	439	458	427	459	485	506
		Lo PR	108	115	126	134	114	122	133	142	119	126	138	147	125	133	145	154	131	139	152	162	135	144	157	167

IDB: Entering Indoor Dry Bulb Temperature

Shaded area reflects AHRI conditions

Amps = outdoor unit amps (comp.+fan)

High and low pressures are measured at the liquid and suction service valves.

kW = Total system power

			OUTDOOR AMBIENT TEMPERATURE																							
			65ºF				75ºF				85ºF				95ºF				105ºF				115ºF			
			ENTERING INDOOR WET BULB TEMPERATURE																							
IDB	AIRFLOW		59	63	67	71	59	63	67	71	59	63	67	71	59	63	67	71	59	63	67	71	59	63	67	71
70	1400	MBh	40.4	41.9	45.9	-	39.5	40.9	44.8	-	38.5	39.9	43.7	-	37.6	38.9	42.7	-	35.7	37.0	40.5	-	33.1	34.3	37.5	-
		S/T	0.71	0.59	0.41	-	0.73	0.61	0.42	-	0.75	0.63	0.43	-	0.78	0.65	0.45	-	0.80	0.67	0.47	-	0.81	0.68	0.47	-
		Δ T	19	16	12	-	19	16	12	-	19	16	12	-	19	17	13	-	19	16	12	-	18	15	12	-
		kW	3.22	3.28	3.37	-	3.44	3.51	3.62	-	3.64	3.72	3.83	-	3.82	3.90	4.02	-	3.97	4.05	4.18	-	4.10	4.19	4.32	-
		Amps	11.8	12.1	12.5	-	12.8	13.1	13.5	-	13.9	14.2	14.7	-	14.8	15.2	15.7	-	15.8	16.2	16.7	-	16.7	17.1	17.7	-
		Hi PR	241	259	274	-	270	291	307	-	307	331	349	-	350	377	398	-	394	424	448	-	435	468	494	-
		Lo PR	104	110	120	-	110	117	127	-	114	121	132	-	120	127	139	-	125	133	146	-	130	138	151	-
	1600	MBh	43.8	45.4	49.7	-	42.7	44.3	48.5	-	41.7	43.2	47.4	-	40.7	42.2	46.2	-	38.7	40.1	43.9	-	35.8	37.1	40.7	-
		S/T	0.73	0.61	0.42	-	0.76	0.63	0.44	-	0.78	0.65	0.45	-	0.80	0.67	0.47	-	0.83	0.70	0.48	-	0.84	0.70	0.49	-
		Δ T	18	16	12	-	19	16	12	-	19	16	12	-	19	16	12	-	19	16	12	-	17	15	11	-
		kW	3.29	3.35	3.45	-	3.52	3.59	3.70	-	3.73	3.80	3.92	-	3.91	3.99	4.12	-	4.07	4.15	4.28	-	4.20	4.29	4.42	-
		Amps	12.2	12.5	12.9	-	13.1	13.5	13.9	-	14.3	14.6	15.1	-	15.3	15.6	16.2	-	16.2	16.6	17.2	-	17.2	17.6	18.2	-
		Hi PR	248	267	282	-	279	300	317	-	317	341	360	-	361	388	410	-	406	437	461	-	449	483	510	-
		Lo PR	107	114	124	-	113	120	131	-	117	125	136	-	123	131	143	-	129	137	150	-	134	142	155	-
	1800	MBh	45.1	46.7	51.2	-	44.0	45.6	50.0	-	43.0	44.5	48.8	-	41.9	43.5	47.6	-	39.8	41.3	45.2	-	36.9	38.2	41.9	-
		S/T	0.77	0.64	0.44	-	0.80	0.67	0.46	-	0.82	0.68	0.47	-	0.84	0.70	0.49	-	0.87	0.73	0.51	-	0.88	0.74	0.51	-
		Δ T	18	15	12	-	18	16	12	-	18	16	12	-	18	16	12	-	18	15	12	-	17	14	11	-
		kW	3.31	3.38	3.48	-	3.55	3.62	3.73	-	3.76	3.83	3.95	-	3.94	4.02	4.15	-	4.10	4.18	4.32	-	4.23	4.32	4.46	-
		Amps	12.3	12.6	13.0	-	13.3	13.6	14.0	-	14.4	14.8	15.3	-	15.4	15.8	16.3	-	16.4	16.8	17.4	-	17.4	17.8	18.4	-
		Hi PR	251	270	285	-	281	303	320	-	320	344	364	-	365	392	414	-	410	441	466	-	453	488	515	-
		Lo PR	108	115	125	-	114	121	132	-	119	126	138	-	125	132	145	-	130	139	152	-	135	144	157	-
75	1400	MBh	41.1	42.3	45.8	49.1	40.1	41.3	44.7	48.0	39.2	40.3	43.7	46.8	38.2	**39.3**	42.6	45.7	36.3	37.4	40.5	43.4	33.6	34.6	37.5	40.2
		S/T	0.80	0.72	0.54	0.35	0.83	0.74	0.56	0.36	0.85	0.76	0.58	0.37	0.88	**0.79**	0.60	0.38	0.91	0.82	0.62	0.40	0.92	0.82	0.62	0.40
		Δ T	22	20	16	11	22	20	17	11	22	20	17	11	22	**20**	17	12	22	20	16	11	20	19	15	11
		kW	3.24	3.30	3.40	3.50	3.47	3.54	3.64	3.75	3.67	3.75	3.86	3.98	3.85	**3.93**	4.05	4.18	4.00	4.09	4.21	4.35	4.13	4.22	4.35	4.49
		Amps	11.9	12.2	12.6	13.1	12.9	13.2	13.7	14.2	14.0	14.4	14.8	15.4	15.0	**15.4**	15.9	16.5	15.9	16.3	16.9	17.5	16.9	17.3	17.9	18.6
		Hi PR	243	262	276	288	273	294	310	324	311	334	353	368	354	**381**	402	419	398	428	452	472	440	473	500	521
		Lo PR	105	111	122	130	111	118	129	137	115	122	134	142	121	**129**	140	149	127	135	147	157	131	139	152	162
	1600	MBh	44.5	45.8	49.6	53.2	43.5	44.8	48.4	52.0	42.4	43.7	47.3	50.8	41.4	**42.6**	46.1	49.5	39.3	40.5	43.8	47.0	36.4	37.5	40.6	43.6
		S/T	0.83	0.75	0.56	0.36	0.86	0.77	0.58	0.38	0.89	0.79	0.60	0.39	0.91	**0.82**	0.62	0.40	0.95	0.85	0.64	0.41	0.96	0.86	0.65	0.42
		Δ T	21	20	16	11	22	20	16	11	22	20	16	11	22	**20**	16	11	21	20	16	11	20	18	15	10
		kW	3.31	3.38	3.48	3.58	3.55	3.62	3.73	3.84	3.76	3.83	3.95	4.08	3.94	**4.02**	4.15	4.28	4.10	4.18	4.32	4.45	4.23	4.32	4.46	4.60
		Amps	12.3	12.6	13.0	13.5	13.3	13.6	14.0	14.6	14.4	14.8	15.3	15.8	15.4	**15.8**	16.3	16.9	16.4	16.8	17.4	18.0	17.4	17.8	18.4	19.1
		Hi PR	251	270	285	297	281	303	320	334	320	344	364	379	365	**392**	414	432	410	441	466	486	453	488	515	537
		Lo PR	108	115	125	134	114	121	132	141	119	126	138	147	125	**132**	145	154	131	139	152	161	135	144	157	167
	1800	MBh	45.8	47.2	51.1	54.8	44.8	46.1	49.9	53.6	43.7	45.0	48.7	52.3	42.6	**43.9**	47.5	51.0	40.5	41.7	45.1	48.5	37.5	38.6	41.8	44.9
		S/T	0.87	0.78	0.59	0.38	0.91	0.81	0.61	0.39	0.93	0.83	0.63	0.40	0.96	**0.86**	0.65	0.42	0.99	0.89	0.67	0.43	1.00	0.90	0.68	0.44
		Δ T	20	19	15	11	21	19	16	11	21	19	16	11	21	**19**	16	11	21	19	16	11	19	18	14	10
		kW	3.34	3.40	3.50	3.61	3.58	3.65	3.76	3.87	3.79	3.86	3.98	4.11	3.97	**4.06**	4.18	4.31	4.13	4.22	4.35	4.49	4.27	4.36	4.50	4.64
		Amps	12.4	12.7	13.1	13.6	13.4	13.7	14.2	14.7	14.5	14.9	15.4	16.0	15.6	**15.9**	16.5	17.1	16.6	17.0	17.5	18.2	17.5	18.0	18.6	19.3
		Hi PR	253	273	288	300	284	306	323	337	323	348	367	383	368	**396**	418	436	414	446	471	491	458	493	520	543
		Lo PR	109	116	127	135	115	123	134	143	120	127	139	148	126	**134**	146	156	132	140	153	163	136	145	158	169

IDB: Entering Indoor Dry Bulb Temperature

Shaded area reflects ACCA (TVA) conditions

Amps = outdoor unit amps (comp.+fan)

High and low pressures are measured at the liquid and suction service valves.

kW = Total system power

			OUTDOOR AMBIENT TEMPERATURE																							
			65ºF				75ºF				85ºF				95ºF				105ºF				115ºF			
			ENTERING INDOOR WET BULB TEMPERATURE																							
IDB	AIRFLOW		59	63	67	71	59	63	67	71	59	63	67	71	59	63	67	71	59	63	67	71	59	63	67	71
80	1400	MBh	41.8	42.7	45.6	48.8	40.8	41.7	44.6	47.7	39.9	40.7	43.5	46.5	38.9	39.7	42.5	45.4	36.9	37.8	40.3	43.1	34.2	35.0	37.4	39.9
		S/T	0.88	0.83	0.67	0.5	0.91	0.86	0.70	0.52	0.94	0.88	0.71	0.5	0.97	0.91	0.74	0.55	1.00	0.94	0.77	0.6	1.01	0.95	0.77	0.58
		Δ T	24	23	20	16	24	23	20	16	25	23	20	16	25	24	21	16	24	23	20	16	23	22	19	15
		kW	3.26	3.33	3.42	3.5	3.49	3.56	3.67	3.78	3.70	3.77	3.89	4.0	3.88	3.96	4.08	4.21	4.03	4.12	4.25	4.4	4.17	4.25	4.39	4.53
		Amps	12.1	12.3	12.7	13.2	13.0	13.3	13.8	14.3	14.2	14.5	15.0	15.5	15.1	15.5	16.0	16.6	16.1	16.5	17.0	17.7	17.1	17.5	18.1	18.8
		Hi PR	246	264	279	291.3	276	297	313	327	314	338	356	371.7	357	384	406	423	402	432	457	476.3	444	478	505	526
		Lo PR	106	113	123	130.9	112	119	130	138	116	124	135	143.7	122	130	142	151	128	136	149	158.2	132	141	154	164
	1600	MBh	45.3	46.3	49.5	52.9	44.2	45.2	48.3	51.6	43.2	44.1	47.2	50.4	42.1	43.1	**46.0**	49.2	40.0	40.9	43.7	46.7	37.1	37.9	40.5	43.3
		S/T	0.91	0.86	0.70	0.5	0.95	0.89	0.72	0.54	0.97	0.91	0.74	0.6	1.00	0.94	**0.77**	0.57	1.00	0.98	0.79	0.6	1.00	0.98	0.80	0.60
		Δ T	24	23	20	16	24	23	20	16	24	23	20	16	24	23	**20**	16	23	23	20	16	21	21	19	15
		kW	3.34	3.40	3.50	3.6	3.58	3.65	3.76	3.87	3.79	3.86	3.98	4.1	3.97	4.06	**4.18**	4.31	4.13	4.22	4.35	4.5	4.27	4.36	4.50	4.64
		Amps	12.4	12.7	13.1	13.6	13.4	13.7	14.2	14.7	14.6	14.9	15.4	16.0	15.6	15.9	**16.5**	17.1	16.6	17.0	17.5	18.2	17.5	18.0	18.6	19.3
		Hi PR	253	273	288	300.3	284	306	323	337	323	348	367	383.2	368	396	**419**	436	414	446	471	491.1	458	493	520	543
		Lo PR	109	116	127	134.9	115	123	134	143	120	127	139	148.1	126	134	**146**	156	132	140	153	163.1	136	145	158	169
	1800	MBh	46.7	47.7	50.9	54.4	45.6	46.6	49.7	53.2	44.5	45.5	48.6	51.9	43.4	44.3	47.4	50.6	41.2	42.1	45.0	48.1	38.2	39.0	41.7	44.6
		S/T	0.96	0.90	0.73	0.5	1.00	0.93	0.76	0.57	1.00	0.95	0.78	0.6	1.00	1.00	0.80	0.60	1.00	1.00	0.83	0.6	1.00	1.00	0.84	0.63
		Δ T	23	22	19	15	23	22	19	15	23	22	19	15	22	23	19	16	21	22	19	15	20	20	18	14
		kW	3.36	3.43	3.53	3.6	3.60	3.68	3.79	3.90	3.82	3.89	4.01	4.1	4.00	4.09	4.21	4.35	4.16	4.25	4.39	4.5	4.30	4.39	4.53	4.68
		Amps	12.5	12.8	13.2	13.7	13.5	13.8	14.3	14.8	14.7	15.0	15.5	16.1	15.7	16.1	16.6	17.2	16.7	17.1	17.7	18.4	17.7	18.1	18.8	19.5
		Hi PR	256	275	291	303.3	287	309	326	340	327	351	371	387.1	372	400	423	441	418	450	476	496.0	462	498	525	548
		Lo PR	110	117	128	136.3	116	124	135	144	121	129	140	149.6	127	135	148	157	133	142	155	164.7	138	147	160	170
85	1400	MBh	42.5	43.4	45.4	48.5	41.5	42.4	44.4	47.3	40.6	41.3	43.3	46.2	39.6	40.3	42.2	45.1	37.6	38.3	40.1	42.8	34.8	35.5	37.2	39.7
		S/T	0.92	0.89	0.80	0.65	0.96	0.92	0.83	0.68	0.98	0.95	0.85	0.69	1.00	0.98	0.88	0.72	1.00	1.00	0.92	0.74	1.00	1.00	0.92	0.75
		Δ T	26	25	24	21	26	26	24	21	26	26	24	21	26	26	24	21	25	25	24	21	23	23	23	20
		kW	3.29	3.35	3.45	3.55	3.52	3.59	3.70	3.81	3.73	3.80	3.92	4.04	3.91	3.99	4.11	4.24	4.07	4.15	4.28	4.42	4.20	4.29	4.42	4.56
		Amps	12.2	12.5	12.9	13.3	13.1	13.5	13.9	14.4	14.3	14.6	15.1	15.7	15.3	15.6	16.2	16.8	16.2	16.6	17.2	17.9	17.2	17.6	18.2	18.9
		Hi PR	248	267	282	294	279	300	317	330	317	341	360	375	361	388	410	428	406	437	461	481	448	483	510	532
		Lo PR	107	114	124	132	113	120	131	140	117	125	136	145	123	131	143	152	129	137	150	160	134	142	155	165
	1600	MBh	46.1	47.0	49.2	52.5	45.0	45.9	48.1	51.3	43.9	44.8	46.9	50.1	42.9	43.7	45.8	48.8	40.7	41.5	43.5	46.4	37.7	38.5	40.3	43.0
		S/T	0.96	0.92	0.83	0.68	0.99	0.96	0.86	0.70	1.00	0.98	0.89	0.72	1.00	1.00	0.91	0.74	1.00	1.00	0.95	0.77	1.00	1.00	0.96	0.78
		Δ T	25	25	24	20	26	25	24	21	25	25	24	21	25	25	24	21	23	24	24	21	22	22	22	19
		kW	3.36	3.43	3.53	3.64	3.60	3.68	3.79	3.90	3.82	3.89	4.01	4.14	4.00	4.09	4.21	4.35	4.16	4.25	4.39	4.53	4.30	4.39	4.53	4.68
		Amps	12.5	12.8	13.2	13.7	13.5	13.8	14.3	14.8	14.7	15.0	15.5	16.1	15.7	16.1	16.6	17.2	16.7	17.1	17.7	18.4	17.7	18.1	18.8	19.5
		Hi PR	256	275	291	303	287	309	326	340	327	351	371	387	372	400	423	441	418	450	476	496	462	498	525	548
		Lo PR	110	117	128	136	116	124	135	144	121	129	140	150	127	135	148	157	133	142	155	165	138	147	160	170
	1800	MBh	47.5	48.4	50.7	54.1	46.4	47.3	49.5	52.8	45.3	46.1	48.3	51.6	44.2	45.0	47.1	50.3	42.0	42.8	44.8	47.8	38.9	39.6	41.5	44.3
		S/T	1.00	0.97	0.87	0.71	1.00	1.00	0.91	0.74	1.00	1.00	0.93	0.75	1.00	1.00	0.96	0.78	1.00	1.00	1.00	0.81	1.00	1.00	1.00	0.81
		Δ T	24	24	23	20	24	24	23	20	23	24	23	20	23	23	23	20	21	22	23	20	20	20	21	18
		kW	3.39	3.45	3.56	3.66	3.63	3.70	3.82	3.93	3.85	3.93	4.05	4.17	4.04	4.12	4.25	4.38	4.20	4.29	4.42	4.56	4.34	4.43	4.57	4.72
		Amps	12.6	12.9	13.3	13.8	13.6	14.0	14.4	15.0	14.8	15.2	15.7	16.3	15.8	16.2	16.8	17.4	16.9	17.3	17.9	18.5	17.9	18.3	18.9	19.7
		Hi PR	258	278	294	306	290	312	330	344	330	355	375	391	376	404	427	445	423	455	480	501	467	503	531	553
		Lo PR	111	118	129	138	118	125	137	145	122	130	142	151	128	137	149	159	134	143	156	166	139	148	162	172

IDB: Entering Indoor Dry Bulb Temperature

Shaded area reflects AHRI conditions

Amps = outdoor unit amps (comp.+fan)

High and low pressures are measured at the liquid and suction service valves.

kW = Total system power

			OUTDOOR AMBIENT TEMPERATURE																							
			65ºF				75ºF				85ºF				95ºF				105ºF				115ºF			
			ENTERING INDOOR WET BULB TEMPERATURE																							
IDB	AIRFLOW		59	63	67	71	59	63	67	71	59	63	67	71	59	63	67	71	59	63	67	71	59	63	67	71
70	1750	MBh	54.2	56.2	61.6	-	53.0	54.9	60.1	-	51.7	53.6	58.7	-	50.4	52.3	57.3	-	47.9	49.7	54.4	-	44.4	46.0	50.4	-
		S/T	0.69	0.58	0.40	-	0.72	0.60	0.42	-	0.74	0.62	0.43	-	0.76	0.64	0.44	-	0.79	0.66	0.46	-	0.80	0.66	0.46	-
		Δ T	20	17	13	-	20	17	13	-	20	17	13	-	20	17	13	-	20	17	13	-	19	16	12	-
		kW	4.03	4.11	4.24	-	4.33	4.42	4.56	-	4.60	4.70	4.85	-	4.83	4.94	5.10	-	5.03	5.14	5.31	-	5.21	5.32	5.49	-
		Amps	15.2	15.6	16.1	-	16.5	16.9	17.5	-	18.0	18.4	19.0	-	19.2	19.7	20.4	-	20.5	21.0	21.7	-	21.7	22.3	23.0	-
		Hi PR	259	279	294	-	291	313	330	-	331	356	376	-	376	405	428	-	423	456	481	-	468	504	532	-
		Lo PR	105	112	122	-	111	118	129	-	116	123	134	-	122	129	141	-	127	135	148	-	132	140	153	-
	1750	MBh	54.2	56.2	61.6	-	53.0	54.9	60.1	-	51.7	53.6	58.7	-	50.4	52.3	57.3	-	47.9	49.7	54.4	-	44.4	46.0	50.4	-
		S/T	0.69	0.58	0.40	-	0.72	0.60	0.42	-	0.74	0.62	0.43	-	0.76	0.64	0.44	-	0.79	0.66	0.46	-	0.80	0.66	0.46	-
		Δ T	20	17	13	-	20	17	13	-	20	17	13	-	20	17	13	-	20	17	13	-	19	16	12	-
		kW	4.03	4.11	4.24	-	4.33	4.42	4.56	-	4.60	4.70	4.85	-	4.83	4.94	5.10	-	5.03	5.14	5.31	-	5.21	5.32	5.49	-
		Amps	15.2	15.6	16.1	-	16.5	16.9	17.5	-	18.0	18.4	19.0	-	19.2	19.7	20.4	-	20.5	21.0	21.7	-	21.7	22.3	23.0	-
		Hi PR	259	279	294	-	291	313	330	-	331	356	376	-	376	405	428	-	423	456	481	-	468	504	532	-
		Lo PR	105	112	122	-	111	118	129	-	116	123	134	-	122	129	141	-	127	135	148	-	132	140	153	-
	2250	MBh	56.1	58.2	63.7	-	54.8	56.8	62.3	-	53.5	55.5	60.8	-	52.2	54.1	59.3	-	49.6	51.4	56.3	-	45.9	47.6	52.2	-
		S/T	0.74	0.62	0.43	-	0.76	0.64	0.44	-	0.78	0.65	0.45	-	0.81	0.68	0.47	-	0.84	0.70	0.49	-	0.85	0.71	0.49	-
		Δ T	17	15	11	-	17	15	11	-	17	15	11	-	17	15	11	-	17	15	11	-	16	14	10	-
		kW	4.09	4.18	4.31	-	4.40	4.49	4.63	-	4.67	4.77	4.92	-	4.91	5.02	5.18	-	5.12	5.23	5.40	-	5.29	5.41	5.58	-
		Amps	15.5	15.9	16.4	-	16.8	17.2	17.8	-	18.3	18.8	19.4	-	19.6	20.1	20.8	-	20.9	21.4	22.1	-	22.1	22.7	23.5	-
		Hi PR	264	284	300	-	296	319	337	-	337	363	383	-	384	413	436	-	432	465	491	-	477	514	542	-
		Lo PR	107	114	125	-	114	121	132	-	118	126	137	-	124	132	144	-	130	138	151	-	134	143	156	-
75	1750	MBh	55.1	56.8	61.5	66.0	53.9	55.5	60.0	64.4	52.6	54.1	58.6	62.9	51.3	52.8	57.2	61.4	48.7	50.2	54.3	58.3	45.1	46.5	50.3	54.0
		S/T	0.79	0.71	0.53	0.34	0.82	0.73	0.55	0.36	0.84	0.75	0.57	0.36	0.86	0.77	0.59	0.38	0.90	0.80	0.61	0.39	0.91	0.81	0.61	0.39
		Δ T	23	21	17	12	23	21	17	12	23	21	17	12	23	21	18	12	23	21	17	12	21	20	16	11
		kW	4.06	4.15	4.27	4.41	4.37	4.46	4.60	4.75	4.64	4.74	4.89	5.04	4.87	4.98	5.14	5.31	5.07	5.19	5.35	5.53	5.25	5.36	5.54	5.72
		Amps	15.4	15.8	16.3	16.9	16.7	17.1	17.6	18.3	18.1	18.6	19.2	20.0	19.4	19.9	20.6	21.4	20.7	21.2	21.9	22.8	21.9	22.5	23.3	24.2
		Hi PR	262	282	297	310	294	316	334	348	334	359	379	396	380	409	432	451	428	460	486	507	473	509	537	560
		Lo PR	106	113	124	132	112	120	131	139	117	124	136	145	123	131	143	152	129	137	149	159	133	142	155	165
	1750	MBh	55.1	56.8	61.5	66.0	53.9	55.5	60.0	64.4	52.6	54.1	58.6	62.9	51.3	**52.8**	57.2	61.4	48.7	50.2	54.3	58.3	45.1	46.5	50.3	54.0
		S/T	0.79	0.71	0.53	0.34	0.82	0.73	0.55	0.36	0.84	0.75	0.57	0.36	0.86	**0.77**	0.59	0.38	0.90	0.80	0.61	0.39	0.91	0.81	0.61	0.39
		Δ T	23	21	17	12	23	21	17	12	23	21	17	12	23	**21**	18	12	23	21	17	12	21	20	16	11
		kW	4.06	4.15	4.27	4.41	4.37	4.46	4.60	4.75	4.64	4.74	4.89	5.04	4.87	**4.98**	5.14	5.31	5.07	5.19	5.35	5.53	5.25	5.36	5.54	5.72
		Amps	15.4	15.8	16.3	16.9	16.7	17.1	17.6	18.3	18.1	18.6	19.2	20.0	19.4	**19.9**	20.6	21.4	20.7	21.2	21.9	22.8	21.9	22.5	23.3	24.2
		Hi PR	262	282	297	310	294	316	334	348	334	359	379	396	380	**409**	432	451	428	460	486	507	473	509	537	560
		Lo PR	106	113	124	132	112	120	131	139	117	124	136	145	123	**131**	143	152	129	137	149	159	133	142	155	165
	2250	MBh	57.1	58.8	63.6	68.3	55.8	57.4	62.1	66.7	54.4	56.0	60.7	65.1	53.1	54.7	59.2	63.5	50.4	51.9	56.2	60.3	46.7	48.1	52.1	55.9
		S/T	0.84	0.75	0.57	0.36	0.87	0.78	0.59	0.38	0.89	0.80	0.60	0.39	0.92	0.82	0.62	0.40	0.95	0.85	0.65	0.42	0.96	0.86	0.65	0.42
		Δ T	20	18	15	10	20	18	15	10	20	18	15	10	20	18	15	10	20	18	15	10	18	17	14	10
		kW	4.13	4.21	4.34	4.48	4.44	4.53	4.67	4.82	4.71	4.81	4.97	5.13	4.95	5.06	5.22	5.40	5.16	5.27	5.44	5.62	5.34	5.45	5.63	5.82
		Amps	15.7	16.1	16.6	17.2	17.0	17.4	18.0	18.7	18.5	18.9	19.6	20.3	19.8	20.3	21.0	21.8	21.1	21.6	22.3	23.2	22.4	22.9	23.7	24.6
		Hi PR	267	287	303	316	299	322	340	355	341	366	387	404	388	417	441	460	436	470	496	517	482	519	548	571
		Lo PR	109	115	126	134	115	122	133	142	119	127	138	147	125	133	145	155	131	140	152	162	136	144	158	168

IDB: Entering Indoor Dry Bulb Temperature

Shaded area reflects ACCA (TVA) conditions

Amps = outdoor unit amps (comp.+fan)

High and low pressures are measured at the liquid and suction service valves.

kW = Total system power

			Outdoor Ambient Temperature																							
			65ºF				75ºF				85ºF				95ºF				105ºF				115ºF			
			Entering Indoor Wet Bulb Temperature																							
IDB	Airflow		59	63	67	71	59	63	67	71	59	63	67	71	59	63	67	71	59	63	67	71	59	63	67	71
80	1750	MBh	56.1	57.4	61.3	65.5	54.8	56.0	59.9	64.0	53.5	54.7	58.4	62.5	52.2	53.4	57.0	60.9	49.6	50.7	54.2	57.9	45.9	46.9	50.2	53.6
		S/T	0.86	0.81	0.66	0.5	0.90	0.84	0.68	0.51	0.92	0.86	0.70	0.5	0.95	0.89	0.72	0.54	0.98	0.92	0.75	0.6	0.99	0.93	0.76	0.57
		Δ T	25	24	21	17	26	25	22	17	26	25	22	17	26	25	22	17	26	25	21	17	24	23	20	16
		kW	4.09	4.18	4.31	4.4	4.40	4.49	4.64	4.78	4.67	4.77	4.93	5.1	4.91	5.02	5.18	5.35	5.12	5.23	5.40	5.6	5.29	5.41	5.59	5.77
		Amps	15.5	15.9	16.4	17.1	16.8	17.2	17.8	18.5	18.3	18.8	19.4	20.1	19.6	20.1	20.8	21.6	20.9	21.4	22.1	23.0	22.2	22.7	23.5	24.4
		Hi PR	264	284	300	313.2	297	319	337	351	337	363	383	399.7	384	413	437	455	432	465	491	512.2	477	514	543	566
		Lo PR	107	114	125	133.0	114	121	132	140	118	126	137	146.0	124	132	144	153	130	138	151	160.7	134	143	156	166
	1750	MBh	56.1	57.4	61.3	65.5	54.8	56.0	59.9	64.0	53.5	54.7	58.4	62.5	52.2	53.4	**57.0**	60.9	49.6	50.7	54.2	57.9	45.9	46.9	50.2	53.6
		S/T	0.86	0.81	0.66	0.5	0.90	0.84	0.68	0.51	0.92	0.86	0.70	0.5	0.95	0.89	**0.72**	0.54	0.98	0.92	0.75	0.6	0.99	0.93	0.76	0.57
		Δ T	25	24	21	17	26	25	22	17	26	25	22	17	26	25	**22**	17	26	25	21	17	24	23	20	16
		kW	4.09	4.18	4.31	4.4	4.40	4.49	4.64	4.78	4.67	4.77	4.93	5.1	4.91	5.02	**5.18**	5.35	5.12	5.23	5.40	5.6	5.29	5.41	5.59	5.77
		Amps	15.5	15.9	16.4	17.1	16.8	17.2	17.8	18.5	18.3	18.8	19.4	20.1	19.6	20.1	**20.8**	21.6	20.9	21.4	22.1	23.0	22.2	22.7	23.5	24.4
		Hi PR	264	284	300	313.2	297	319	337	351	337	363	383	399.7	384	413	**437**	455	432	465	491	512.2	477	514	543	566
		Lo PR	107	114	125	133.0	114	121	132	140	118	126	137	146.0	124	132	**144**	153	130	138	151	160.7	134	143	156	166
	2250	MBh	58.1	59.4	63.4	67.8	56.7	58.0	61.9	66.2	55.4	56.6	60.5	64.6	54.0	55.2	59.0	63.1	51.3	52.5	56.0	59.9	47.6	48.6	51.9	55.5
		S/T	0.92	0.86	0.70	0.5	0.95	0.89	0.73	0.54	1.00	0.92	0.75	0.6	1.00	0.95	0.77	0.58	1.00	1.00	0.80	0.6	1.00	1.00	0.81	0.60
		Δ T	22	21	18	15	22	21	18	15	23	21	18	15	22	21	19	15	21	21	18	15	19	20	17	14
		kW	4.16	4.24	4.38	4.5	4.47	4.57	4.71	4.86	4.75	4.85	5.01	5.2	4.99	5.10	5.27	5.44	5.20	5.32	5.49	5.7	5.38	5.50	5.68	5.87
		Amps	15.8	16.2	16.7	17.4	17.1	17.6	18.1	18.8	18.6	19.1	19.8	20.5	20.0	20.5	21.2	22.0	21.3	21.8	22.6	23.4	22.6	23.1	23.9	24.9
		Hi PR	270	290	306	319.5	302	326	344	358	344	370	391	407.7	392	422	445	464	441	474	501	522.4	487	524	553	577
		Lo PR	110	117	127	135.6	116	123	135	143	120	128	140	148.9	126	135	147	156	133	141	154	163.9	137	146	159	170
85	1750	MBh	57.1	58.2	61.0	65.0	55.8	56.9	59.6	63.5	54.5	55.5	58.1	62.0	53.1	54.2	56.7	60.5	50.5	51.4	53.9	57.5	46.7	47.7	49.9	53.2
		S/T	0.91	0.87	0.79	0.64	0.94	0.91	0.82	0.66	0.96	0.93	0.84	0.68	0.99	0.96	0.87	0.70	1.00	1.00	0.90	0.73	1.00	1.00	0.91	0.74
		Δ T	27	27	25	22	28	27	26	22	28	27	26	22	28	27	26	22	27	27	25	22	25	25	24	21
		kW	4.13	4.21	4.34	4.48	4.44	4.53	4.67	4.82	4.71	4.81	4.97	5.13	4.95	5.06	5.22	5.40	5.16	5.27	5.44	5.63	5.34	5.45	5.63	5.82
		Amps	15.7	16.1	16.6	17.2	17.0	17.4	18.0	18.7	18.5	18.9	19.6	20.3	19.8	20.3	21.0	21.8	21.1	21.6	22.3	23.2	22.4	22.9	23.7	24.6
		Hi PR	267	287	303	316	300	322	340	355	341	367	387	404	388	417	441	460	436	470	496	517	482	519	548	572
		Lo PR	109	116	126	134	115	122	133	142	119	127	138	147	125	133	145	155	131	140	152	162	136	144	158	168
	1750	MBh	57.1	58.2	61.0	65.0	55.8	56.9	59.6	63.5	54.5	55.5	58.1	62.0	53.1	54.2	56.7	60.5	50.5	51.4	53.9	57.5	46.7	47.7	49.9	53.2
		S/T	0.91	0.87	0.79	0.64	0.94	0.91	0.82	0.66	0.96	0.93	0.84	0.68	0.99	0.96	0.87	0.70	1.00	1.00	0.90	0.73	1.00	1.00	0.91	0.74
		Δ T	27	27	25	22	28	27	26	22	28	27	26	22	28	27	26	22	27	27	25	22	25	25	24	21
		kW	4.13	4.21	4.34	4.48	4.44	4.53	4.67	4.82	4.71	4.81	4.97	5.13	4.95	5.06	5.22	5.40	5.16	5.27	5.44	5.63	5.34	5.45	5.63	5.82
		Amps	15.7	16.1	16.6	17.2	17.0	17.4	18.0	18.7	18.5	18.9	19.6	20.3	19.8	20.3	21.0	21.8	21.1	21.6	22.3	23.2	22.4	22.9	23.7	24.6
		Hi PR	267	287	303	316	300	322	340	355	341	367	387	404	388	417	441	460	436	470	496	517	482	519	548	572
		Lo PR	109	116	126	134	115	122	133	142	119	127	138	147	125	133	145	155	131	140	152	162	136	144	158	168
	2250	MBh	59.1	60.3	63.1	67.3	57.7	58.8	61.6	65.8	56.4	57.4	60.2	64.2	55.0	56.0	58.7	62.6	52.2	53.2	55.8	59.5	48.4	49.3	51.7	55.1
		S/T	0.96	0.93	0.84	0.68	1.00	0.96	0.87	0.71	1.00	0.99	0.89	0.72	1.00	1.00	0.92	0.75	1.00	1.00	0.96	0.77	1.00	1.00	0.96	0.78
		Δ T	23	23	22	19	24	23	22	19	23	23	22	19	22	23	22	19	21	22	22	19	20	20	20	18
		kW	4.19	4.28	4.41	4.55	4.51	4.60	4.75	4.90	4.79	4.89	5.05	5.21	5.03	5.14	5.31	5.49	5.24	5.36	5.53	5.72	5.42	5.55	5.73	5.92
		Amps	16.0	16.4	16.9	17.5	17.3	17.7	18.3	19.0	18.8	19.3	19.9	20.7	20.1	20.7	21.4	22.2	21.5	22.0	22.8	23.7	22.8	23.4	24.2	25.1
		Hi PR	272	293	309	323	305	329	347	362	347	374	395	412	396	426	450	469	445	479	506	528	492	529	559	583
		Lo PR	111	118	129	137	117	124	136	145	122	129	141	150	128	136	148	158	134	142	155	166	138	147	161	171

IDB: Entering Indoor Dry Bulb Temperature

Shaded area reflects AHRI conditions

Amps = outdoor unit amps (comp.+fan)

High and low pressures are measured at the liquid and suction service valves.

kW = Total system power

			OUTDOOR AMBIENT TEMPERATURE																							
			65ºF				75ºF				85ºF				95ºF				105ºF				115ºF			
			ENTERING INDOOR WET BULB TEMPERATURE																							
IDB	AIRFLOW		59	63	67	71	59	63	67	71	59	63	67	71	59	63	67	71	59	63	67	71	59	63	67	71
70	1750	MBh	55.4	57.4	62.9	-	54.1	56.1	61.4	-	52.8	54.7	59.9	-	51.5	53.4	58.5	-	48.9	50.7	55.6	-	45.3	47.0	51.5	-
		S/T	0.68	0.57	0.39	-	0.71	0.59	0.41	-	0.72	0.61	0.42	-	0.75	0.62	0.43	-	0.78	0.65	0.45	-	0.78	0.65	0.45	-
		Δ T	20	17	13	-	20	17	13	-	20	17	13	-	20	18	13	-	20	17	13	-	19	16	12	-
		kW	4.00	4.08	4.21	-	4.31	4.40	4.54	-	4.58	4.68	4.84	-	4.82	4.93	5.09	-	5.03	5.14	5.31	-	5.20	5.32	5.50	-
		Amps	15.5	15.9	16.4	-	16.8	17.2	17.8	-	18.3	18.8	19.4	-	19.6	20.1	20.8	-	20.9	21.4	22.2	-	22.2	22.7	23.5	-
		Hi PR	249	268	283	-	280	301	318	-	318	342	362	-	362	390	412	-	408	439	463	-	451	485	512	-
		Lo PR	100	106	116	-	105	112	122	-	109	116	127	-	115	122	133	-	120	128	140	-	125	132	145	-
	1500	MBh	53.8	55.7	61.0	-	52.5	54.4	59.6	-	51.3	53.1	58.2	-	50.0	51.8	56.8	-	47.5	49.2	53.9	-	44.0	45.6	50.0	-
		S/T	0.65	0.54	0.38	-	0.67	0.56	0.39	-	0.69	0.58	0.40	-	0.71	0.60	0.41	-	0.74	0.62	0.43	-	0.75	0.62	0.43	-
		Δ T	21	19	14	-	22	19	14	-	22	19	14	-	22	19	14	-	22	19	14	-	20	17	13	-
		kW	3.97	4.05	4.18	-	4.27	4.37	4.51	-	4.54	4.64	4.80	-	4.78	4.89	5.05	-	4.99	5.10	5.27	-	5.16	5.28	5.45	-
		Amps	15.4	15.8	16.3	-	16.7	17.1	17.7	-	18.1	18.6	19.2	-	19.4	19.9	20.6	-	20.7	21.2	22.0	-	22.0	22.5	23.3	-
		Hi PR	247	266	281	-	277	298	315	-	315	339	358	-	359	386	408	-	404	434	459	-	446	480	507	-
		Lo PR	99	105	115	-	104	111	121	-	108	115	126	-	114	121	132	-	119	127	138	-	123	131	143	-
	2250	MBh	55.6	57.7	63.2	-	54.3	56.3	61.7	-	53.0	55.0	60.2	-	51.8	53.6	58.8	-	49.2	51.0	55.8	-	45.5	47.2	51.7	-
		S/T	0.69	0.58	0.40	-	0.72	0.60	0.41	-	0.73	0.61	0.43	-	0.76	0.63	0.44	-	0.79	0.66	0.46	-	0.79	0.66	0.46	-
		Δ T	16	14	10	-	16	14	10	-	16	14	10	-	16	14	11	-	16	14	10	-	15	13	10	-
		kW	4.03	4.12	4.25	-	4.34	4.44	4.58	-	4.62	4.72	4.88	-	4.86	4.97	5.13	-	5.07	5.18	5.36	-	5.25	5.37	5.55	-
		Amps	15.7	16.1	16.6	-	17.0	17.4	18.0	-	18.5	19.0	19.6	-	19.8	20.3	21.0	-	21.1	21.6	22.4	-	22.4	23.0	23.7	-
		Hi PR	252	271	286	-	283	304	321	-	321	346	365	-	366	394	416	-	412	443	468	-	455	490	517	-
		Lo PR	101	107	117	-	106	113	123	-	110	118	128	-	116	123	135	-	122	129	141	-	126	134	146	-
75	1750	MBh	56.3	58.0	62.7	67.3	55.0	56.6	61.3	65.8	53.7	55.3	59.8	64.2	52.4	53.9	58.4	62.6	49.8	51.2	55.5	59.5	46.1	47.5	51.4	55.1
		S/T	0.78	0.69	0.52	0.34	0.80	0.72	0.54	0.35	0.82	0.74	0.56	0.36	0.85	0.76	0.58	0.37	0.88	0.79	0.60	0.38	0.89	0.80	0.60	0.39
		Δ T	23	21	17	12	23	21	18	12	23	21	18	12	23	22	18	12	23	21	17	12	22	20	16	11
		kW	4.03	4.12	4.25	4.39	4.34	4.44	4.58	4.73	4.62	4.72	4.88	5.04	4.86	4.97	5.14	5.31	5.07	5.18	5.36	5.54	5.25	5.37	5.55	5.74
		Amps	15.7	16.1	16.6	17.2	17.0	17.4	18.0	18.7	18.5	19.0	19.6	20.4	19.8	20.3	21.0	21.8	21.1	21.6	22.4	23.3	22.4	23.0	23.8	24.7
		Hi PR	252	271	286	299	283	304	321	335	321	346	365	381	366	394	416	434	412	443	468	488	455	490	517	539
		Lo PR	101	107	117	124	106	113	123	131	110	118	128	137	116	123	135	144	122	129	141	150	126	134	146	156
	1500	MBh	54.7	56.3	60.9	65.4	53.4	55.0	59.5	63.9	52.1	53.7	58.1	62.3	50.9	**52.4**	56.7	60.8	48.3	49.7	53.8	57.8	44.7	46.1	49.9	53.5
		S/T	0.74	0.66	0.50	0.32	0.77	0.69	0.52	0.33	0.79	0.70	0.53	0.34	0.81	**0.73**	0.55	0.35	0.84	0.75	0.57	0.37	0.85	0.76	0.57	0.37
		Δ T	25	23	19	13	25	23	19	13	25	23	19	13	25	**23**	19	13	25	23	19	13	23	21	18	12
		kW	4.00	4.09	4.21	4.35	4.31	4.40	4.54	4.69	4.58	4.68	4.84	5.00	4.82	**4.93**	5.09	5.26	5.03	5.14	5.31	5.49	5.20	5.32	5.50	5.69
		Amps	15.5	15.9	16.5	17.1	16.8	17.2	17.8	18.5	18.3	18.8	19.4	20.2	19.6	**20.1**	20.8	21.6	20.9	21.4	22.2	23.0	22.2	22.7	23.5	24.4
		Hi PR	249	268	283	296	280	301	318	332	318	343	362	377	363	**390**	412	430	408	439	463	483	451	485	512	534
		Lo PR	100	106	116	123	105	112	122	130	109	116	127	135	115	**122**	133	142	120	128	140	149	125	133	145	154
	2250	MBh	56.6	58.3	63.1	67.7	55.3	56.9	61.6	66.1	53.9	55.5	60.1	64.5	52.6	54.2	58.7	63.0	50.0	51.5	55.7	59.8	46.3	47.7	51.6	55.4
		S/T	0.79	0.70	0.53	0.34	0.81	0.73	0.55	0.35	0.84	0.75	0.57	0.36	0.86	0.77	0.58	0.38	0.89	0.80	0.61	0.39	0.90	0.81	0.61	0.39
		Δ T	18	17	14	9	18	17	14	10	18	17	14	10	19	17	14	10	18	17	14	10	17	16	13	9
		kW	4.06	4.15	4.28	4.42	4.38	4.47	4.62	4.77	4.66	4.76	4.92	5.08	4.90	5.01	5.18	5.35	5.11	5.23	5.40	5.59	5.29	5.41	5.59	5.79
		Amps	15.8	16.2	16.8	17.4	17.1	17.6	18.2	18.9	18.7	19.1	19.8	20.6	20.0	20.5	21.2	22.0	21.3	21.8	22.6	23.5	22.6	23.2	24.0	24.9
		Hi PR	254	274	289	302	285	307	324	338	325	349	369	385	370	398	420	438	416	448	473	493	460	495	522	545
		Lo PR	102	108	118	126	107	114	125	133	112	119	130	138	117	125	136	145	123	131	143	152	127	135	148	157

IDB: Entering Indoor Dry Bulb Temperature

Shaded area reflects ACCA (TVA) conditions

Amps = outdoor unit amps (comp.+fan)

High and low pressures are measured at the liquid and suction service valves.

kW = Total system power

			Outdoor Ambient Temperature																							
			65ºF				75ºF				85ºF				95ºF				105ºF				115ºF			
			Entering Indoor Wet Bulb Temperature																							
IDB	Airflow		59	63	67	71	59	63	67	71	59	63	67	71	59	63	67	71	59	63	67	71	59	63	67	71
80	1750	MBh	57.3	58.6	62.6	66.9	56.0	57.2	61.1	65.3	54.6	55.8	59.6	63.8	53.3	54.5	58.2	62.2	50.6	51.7	55.3	59.1	46.9	47.9	51.2	54.7
		S/T	0.85	0.80	0.65	0.5	0.88	0.83	0.67	0.50	0.90	0.85	0.69	0.5	0.93	0.87	0.71	0.53	0.97	0.91	0.74	0.6	1.00	0.92	0.75	0.56
		Δ T	26	25	21	17	26	25	22	17	26	25	22	17	26	25	22	17	26	25	21	17	25	23	20	16
		kW	4.06	4.15	4.28	4.4	4.38	4.48	4.62	4.77	4.66	4.76	4.92	5.1	4.90	5.01	5.18	5.35	5.11	5.23	5.40	5.6	5.29	5.41	5.59	5.79
		Amps	15.8	16.2	16.8	17.4	17.1	17.6	18.2	18.9	18.7	19.1	19.8	20.6	20.0	20.5	21.2	22.0	21.3	21.8	22.6	23.5	22.6	23.2	24.0	24.9
		Hi PR	254	274	289	301.6	286	307	324	338	325	349	369	384.9	370	398	420	438	416	448	473	493.1	460	495	522	545
		Lo PR	102	108	118	125.7	107	114	125	133	112	119	130	138.0	117	125	136	145	123	131	143	152.0	127	135	148	157
	1500	MBh	55.6	56.9	60.7	64.9	54.3	55.5	59.3	63.4	53.0	54.2	57.9	61.9	51.8	52.9	**56.5**	60.4	49.2	50.2	53.7	57.4	45.5	46.5	49.7	53.2
		S/T	0.81	0.76	0.62	0.5	0.84	0.79	0.64	0.48	0.86	0.81	0.66	0.5	0.89	0.83	**0.68**	0.51	0.92	0.87	0.70	0.5	0.93	0.87	0.71	0.53
		Δ T	28	26	23	18	28	27	23	19	28	27	23	19	28	27	**24**	19	28	27	23	19	26	25	22	17
		kW	4.03	4.12	4.25	4.4	4.34	4.44	4.58	4.73	4.62	4.72	4.88	5.0	4.86	4.97	**5.14**	5.31	5.07	5.18	5.36	5.5	5.25	5.37	5.55	5.74
		Amps	15.7	16.1	16.6	17.2	17.0	17.4	18.0	18.7	18.5	19.0	19.6	20.4	19.8	20.3	**21.0**	21.8	21.1	21.6	22.4	23.3	22.4	23.0	23.8	24.7
		Hi PR	252	271	286	298.6	283	304	321	335	321	346	365	381.0	366	394	**416**	434	412	443	468	488.2	455	490	517	539
		Lo PR	101	107	117	124.5	106	113	123	132	110	118	128	136.7	116	123	**135**	144	122	129	141	150.5	126	134	146	156
	2250	MBh	57.6	58.8	62.9	67.2	56.2	57.5	61.4	65.6	54.9	56.1	59.9	64.1	53.6	54.7	58.5	62.5	50.9	52.0	55.6	59.4	47.1	48.2	51.5	55.0
		S/T	0.86	0.81	0.66	0.5	0.89	0.84	0.68	0.51	0.92	0.86	0.70	0.5	0.95	0.89	0.72	0.54	1.00	0.92	0.75	0.6	1.00	0.93	0.76	0.56
		Δ T	20	19	17	14	21	20	17	14	21	20	17	14	21	20	17	14	21	20	17	14	19	18	16	13
		kW	4.10	4.18	4.32	4.5	4.42	4.51	4.66	4.81	4.70	4.80	4.96	5.1	4.94	5.06	5.22	5.40	5.16	5.27	5.45	5.6	5.34	5.46	5.64	5.84
		Amps	16.0	16.4	16.9	17.6	17.3	17.7	18.3	19.0	18.8	19.3	20.0	20.7	20.2	20.7	21.4	22.2	21.5	22.1	22.8	23.7	22.8	23.4	24.2	25.2
		Hi PR	257	277	292	304.6	288	310	328	342	328	353	373	388.7	373	402	424	443	420	452	477	498.0	464	500	528	550
		Lo PR	103	109	119	127.0	108	115	126	134	113	120	131	139.4	118	126	137	146	124	132	144	153.5	128	137	149	159
85	1750	MBh	58.3	59.4	62.2	66.4	56.9	58.1	60.8	64.9	55.6	56.7	59.4	63.3	54.2	55.3	57.9	61.8	51.5	52.5	55.0	58.7	47.7	48.7	51.0	54.4
		S/T	0.89	0.86	0.78	0.63	0.92	0.89	0.80	0.65	0.95	0.91	0.82	0.67	0.98	0.94	0.85	0.69	1.00	0.98	0.88	0.72	1.00	0.99	0.89	0.72
		Δ T	27	27	25	22	28	27	26	22	28	27	26	22	28	27	26	22	27	27	26	22	25	25	24	21
		kW	4.10	4.19	4.32	4.46	4.42	4.51	4.66	4.81	4.70	4.80	4.96	5.12	4.95	5.06	5.22	5.40	5.16	5.27	5.45	5.63	5.34	5.46	5.64	5.84
		Amps	16.0	16.4	16.9	17.6	17.3	17.7	18.3	19.0	18.8	19.3	20.0	20.7	20.2	20.7	21.4	22.2	21.5	22.1	22.8	23.7	22.8	23.4	24.2	25.2
		Hi PR	257	277	292	305	288	310	328	342	328	353	373	389	374	402	424	443	420	452	478	498	464	500	528	550
		Lo PR	103	109	119	127	108	115	126	134	113	120	131	139	118	126	138	146	124	132	144	153	128	137	149	159
	1500	MBh	56.6	57.7	60.4	64.5	55.3	56.4	59.0	63.0	54.0	55.0	57.6	61.5	52.7	53.7	56.2	60.0	50.0	51.0	53.4	57.0	46.3	47.2	49.5	52.8
		S/T	0.85	0.82	0.74	0.60	0.88	0.85	0.77	0.62	0.90	0.87	0.79	0.64	0.93	0.90	0.81	0.66	0.97	0.93	0.84	0.68	0.98	0.94	0.85	0.69
		Δ T	29	29	27	24	30	29	28	24	30	29	28	24	30	30	28	24	30	29	28	24	28	27	26	22
		kW	4.06	4.15	4.28	4.42	4.38	4.48	4.62	4.77	4.66	4.76	4.92	5.08	4.90	5.01	5.18	5.35	5.11	5.23	5.40	5.59	5.29	5.41	5.59	5.79
		Amps	15.8	16.2	16.8	17.4	17.1	17.6	18.2	18.9	18.7	19.1	19.8	20.6	20.0	20.5	21.2	22.0	21.3	21.8	22.6	23.5	22.6	23.2	24.0	24.9
		Hi PR	254	274	289	302	286	307	324	338	325	349	369	385	370	398	420	438	416	448	473	493	460	495	522	545
		Lo PR	102	108	118	126	107	114	125	133	112	119	130	138	117	125	136	145	123	131	143	152	127	135	148	157
	2250	MBh	58.6	59.7	62.5	66.7	57.2	58.3	61.1	65.2	55.9	56.9	59.6	63.6	54.5	55.6	58.2	62.1	51.8	52.8	55.3	59.0	48.0	48.9	51.2	54.6
		S/T	0.90	0.87	0.79	0.64	0.94	0.90	0.82	0.66	0.96	0.93	0.84	0.68	0.99	0.96	0.86	0.70	1.00	0.99	0.90	0.73	1.00	1.00	0.90	0.73
		Δ T	22	21	20	17	22	22	20	18	22	22	20	18	22	22	21	18	21	21	20	18	20	20	19	16
		kW	4.13	4.22	4.35	4.49	4.45	4.55	4.70	4.85	4.74	4.84	5.00	5.17	4.99	5.10	5.27	5.45	5.20	5.32	5.49	5.68	5.38	5.51	5.69	5.89
		Amps	16.1	16.5	17.1	17.7	17.5	17.9	18.5	19.2	19.0	19.5	20.2	20.9	20.4	20.9	21.6	22.4	21.7	22.3	23.0	23.9	23.0	23.6	24.4	25.4
		Hi PR	260	279	295	308	291	313	331	345	331	356	376	393	377	406	429	447	424	457	482	503	469	505	533	556
		Lo PR	104	110	120	128	110	117	127	135	114	121	132	141	120	127	139	148	125	133	146	155	130	138	151	160

IDB: Entering Indoor Dry Bulb Temperature

Shaded area reflects AHRI conditions

Amps = outdoor unit amps (comp.+fan)

High and low pressures are measured at the liquid and suction service valves.

kW = Total system power

Outdoor Unit	Indoor Units		Cooling Ratings				CFM	AHRI #
	Coils/Air Handlers	Furnaces	Total[1]	Sens.[1]	SEER[2]	EER[3]		
DX13SN 0181A*	ACNF18XX16D*		16,800	12,200	13.0	10.8	600	6524085
	ACNF24XX16D*		17,000	12,400	13.0	10.8	600	6524087
	ARUF18B14A*		17,200	12,500	13.0	11.0	600	6524093
	ARUF18B14A*+TXV		17,200	12,500	13.0	11.0	600	6524095
	ARUF18B14A*+TXV+HSK		17,200	12,500	13.0	11.0	600	9114191
	ARUF24B14C*+TXV		17,200	12,500	13.5	11.0	600	7084862
	ARUF24B14C*+TXV+HSK		17,200	12,500	13.5	11.0	600	9114202
	ARUF25B14A*		18,000	13,100	13.0	11.0	570	7988987
	ASPT25B14A*		17,600	12,800	14.0	12.0	580	8245750
	ASPT25B14A*+HSK		17,600	12,800	14.0	12.0	580	9114250
	ASPT29B14A*		18,000	13,100	14.0	12.0	560	8245751
	ASPT29B14A*+HSK		18,000	13,100	14.0	12.0	560	9114251
	ASPT30C14A*		18,000	13,100	14.0	12.0	580	6524109
	ASPT30C14A*+HSK		18,000	13,100	14.0	12.0	580	9114196
	ASPT33C14B*+HSK		18,000	13,700	14.0	12.0	615	201834876
	AVPTC24B14A*		17,600	12,800	14.0	12.0	600	6524117
	AVPTC30C14A*		18,000	13,100	14.0	12.0	615	6524121
	AWUF18XX16B*		17,400	12,700	13.0	11.0	650	6524125
	AWUF31XX16A*		17,400	12,700	14.0	11.5	600	6524127
	CA*F1824*6D*	D*80HE0603B*A*	17,800	13,000	14.0	11.5	640	6524225
	CA*F1824*6D*	D*80VC0604B*A*	17,700	12,900	14.0	11.6	620	6524229
	CA*F1824*6D*	D*96VC0403BNA*	17,800	13,000	14.0	11.5	625	7360157
	CA*F1824*6D*	D*96VC0603BNA*	17,800	13,000	14.0	11.5	600	7360158
	CA*F1824*6D*	D*96VC0803BNA*	17,800	13,000	14.0	11.5	630	7360159
	CA*F1824*6D*	D*97MC0603BNA*	17,800	13,000	14.0	11.5	600	7360160
	CA*F1824*6D*	D*97MC0803BNA*	17,800	13,000	14.0	11.5	630	7360161
	CA*F1824*6D*	D*96VE0302BNA*	17,800	13,000	14.0	11.5	600	7367127
	CA*F1824*6D*	D*96VE0402BNA*	17,800	13,000	14.0	11.5	600	7367132
	CA*F1824*6D*	D*96VE0603BNA*	17,400	12,700	14.0	11.5	550	7367137
	CA*F1824*6D*	D*96VE0803BNA*	17,800	13,000	14.0	11.5	575	7367142
	CA*F1824*6D*	D*80VC0603B*A*	17,800	13,900	14.0	11.5	600	9948423
	CA*F1824*6D*	D*80VC0803B*A*	17,800	13,900	14.0	11.5	600	9948429
	CA*F1824*6D*	D*96VE0303ANA*	17800	14100	13.5	11.5	650	10516612
	CA*F1824*6D*	D*96VE0403ANA*	17800	14100	13.5	11.5	610	10516617
	CA*F1824*6D*	D*96VE0603ANA*	17400	13800	14	11.5	580	10516622
	CA*F1824*6D*+EEP		17,800	13,000	13.0	11.0	600	6524129
	CA*F1824*6D*+MBVC1200**-1A*		18,200	13,300	14.0	11.5	640	6524131
	CA*F1824*6D*+TXV	D*96VC0403BNA*	17,800	13,000	14.0	11.5	625	7360162
	CA*F1824*6D*+TXV	D*96VC0603BNA*	17,800	13,000	14.0	11.5	600	7360163
	CA*F1824*6D*+TXV	D*96VC0803BNA*	17,800	13,000	14.0	11.5	630	7360164
	CA*F1824*6D*+TXV	D*97MC0603BNA*	17,800	13,000	14.0	11.5	600	7360165
	CA*F1824*6D*+TXV	D*97MC0803BNA*	17,800	13,000	14.0	11.5	630	7360166
	CA*F1824*6D*+TXV	D*96VE0302BNA*	17,800	13,000	14.0	11.5	600	7367128
	CA*F1824*6D*+TXV	D*96VE0402BNA*	17,800	13,000	14.0	11.5	600	7367133
	CA*F1824*6D*+TXV	D*96VE0603BNA*	17,400	12,700	14.0	11.5	550	7367138
	CA*F1824*6D*+TXV	D*96VE0803BNA*	17,800	13,000	14.0	11.5	575	7367143
	CA*F1824*6D*+TXV	D*80VC0603B*A*	18,000	14,100	14.0	11.5	600	9949064
	CA*F1824*6D*+TXV	D*80VC0803B*A*	18,000	14,100	14.0	11.5	600	9949071
	CA*F1824*6D*+TXV	D*96VE0303ANA*	17800	14100	14	12	650	10516613

See Notes on Page 45.

Outdoor Unit	Indoor Units		Cooling Ratings				CFM	AHRI #
		10.8 600	6524085	ACNF24	XX16D*	17,		
DX13SN 0181A* (cont.)	CA*F1824*6D*+TXV	D*96VE0403ANA*	17800	14100	14	11.5	610	10516618
	CA*F1824*6D*+TXV	D*96VE0603ANA*	17400	13800	14	12	580	10516623
	CA*F1824*6D*+TXV+HSK	D*96VC0403BNA*	17,800	13,000	14.0	11.5	625	9114203
	CA*F1824*6D*+TXV+HSK	D*96VC0603BNA*	17,800	13,000	14.0	11.5	600	9114204
	CA*F1824*6D*+TXV+HSK	D*96VC0803BNA*	17,800	13,000	14.0	11.5	630	9114205
	CA*F1824*6D*+TXV+HSK	D*97MC0603BNA*	17,800	13,000	14.0	11.5	600	9114206
	CA*F1824*6D*+TXV+HSK	D*97MC0803BNA*	17,800	13,000	14.0	11.5	630	9114207
	CA*F1824*6D*+TXV+HSK	D*96VE0302BNA*	17,800	13,000	14.0	11.5	600	9114238
	CA*F1824*6D*+TXV+HSK	D*96VE0402BNA*	17,800	13,000	14.0	11.5	600	9114241
	CA*F1824*6D*+TXV+HSK	D*96VE0603BNA*	17,400	12,700	14.0	11.5	550	9114244
	CA*F1824*6D*+TXV+HSK	D*96VE0803BNA*	17,800	13,000	14.0	11.5	575	9114247
	CA*F3030*6D*+EEP		18,000	13,100	13.0	11.0	650	6524133
	CA*F3030*6D*+EEP+TXV		18,000	13,100	13.0	11.0	650	6524135
	CA*F3030*6D*+EEP+TXV+HSK		18,000	13,100	13.0	11.0	650	9114193
	CA*F3131*6D*+EEP		18,000	13,100	13.0	11.0	650	6524137
	CA*F3131*6D*+EEP+TXV		18,000	13,100	13.0	11.0	650	6524139
	CA*F3131*6D*+EEP+TXV+HSK		18,000	13,100	13.0	11.0	650	9114192
	CA*F3636*6D*	D*96VC0403BNA*	18,400	13,400	14.0	11.5	625	7360167
	CA*F3636*6D*	D*96VC0603BNA*	18,400	13,400	14.0	11.5	600	7360168
	CA*F3636*6D*	D*96VC0803BNA*	18,400	13,400	14.0	11.5	630	7360169
	CA*F3636*6D*	D*97MC0603BNA*	18,400	13,400	14.0	11.5	600	7360170
	CA*F3636*6D*	D*97MC0803BNA*	18,400	13,400	14.0	11.5	630	7360171
	CA*F3636*6D*	D*80VC0603B*A*	18,000	14,100	14.0	11.5	600	9948424
	CA*F3636*6D*	D*80VC0803B*A*	18,000	14,100	14.0	11.5	600	9948430
	CA*F3636*6D*+TXV	D*96VC0403BNA*	18,400	13,400	14.0	11.5	625	7360172
	CA*F3636*6D*+TXV	D*96VC0603BNA*	18,400	13,400	14.0	11.5	600	7360173
	CA*F3636*6D*+TXV	D*96VC0803BNA*	18,400	13,400	14.0	11.5	630	7360174
	CA*F3636*6D*+TXV	D*97MC0603BNA*	18,400	13,400	14.0	11.5	600	7360175
	CA*F3636*6D*+TXV	D*97MC0803BNA*	18,400	13,400	14.0	11.5	630	7360176
	CA*F3636*6D*+TXV	D*80VC0603B*A*	18,000	14,100	14.0	11.5	600	9949065
	CA*F3636*6D*+TXV	D*80VC0803B*A*	18,000	14,100	14.0	11.5	600	9949072
	CA*F3636*6D*+TXV+HSK	D*96VC0403BNA*	18,400	13,400	14.0	11.5	625	9114208
	CA*F3636*6D*+TXV+HSK	D*96VC0603BNA*	18,400	13,400	14.0	11.5	600	9114209
	CA*F3636*6D*+TXV+HSK	D*96VC0803BNA*	18,400	13,400	14.0	11.5	630	9114210
	CA*F3636*6D*+TXV+HSK	D*97MC0603BNA*	18,400	13,400	14.0	11.5	600	9114211
	CA*F3636*6D*+TXV+HSK	D*97MC0803BNA*	18,400	13,400	14.0	11.5	630	9114212
	CA*FA1714*6A*	D*80HE0603B*A*	18,000	13,100	14.0	11.5	560	203204245
	CA*FA1714*6A*	D*80VC0603B*A*	17,800	13,000	14.0	11.5	610	203204247
	CA*FA1714*6A*	D*80VC0803B*A*	17,800	13,000	14.0	11.5	610	203204248
	CA*FA1714*6A*	D*96VC0403BNA*	17,800	13,000	13.5	11.5	610	203204250
	CA*FA1714*6A*	D*96VC0603BNA*	17,800	13,000	13.5	11.5	620	203204252
	CA*FA1714*6A*	D*96VC0803BNA*	18,000	13,100	13.5	11.5	630	203204254
	CA*FA1714*6A*	D*96VE0303ANA*	17,800	13,000	13.0	11.0	615	203204256
	CA*FA1714*6A*	D*96VE0402BNA*	17,800	13,000	13.0	11.0	540	203204258
	CA*FA1714*6A*	D*96VE0403ANA*	17,800	13,000	13.0	11.0	615	203204260
	CA*FA1714*6A*	D*96VE0403BNA*	17,800	13,000	13.0	11.0	570	203204262
	CA*FA1714*6A*	D*96VE0603ANA*	18,000	13,100	13.0	11.0	545	203204265
	CA*FA1714*6A*	D*97MC0603BNA*	17,800	13,000	13.5	11.5	620	203204267
	CA*FA1714*6A*	D*97MC0803BNA*	18,000	13,100	13.5	11.5	600	203204269

See Notes on Page 45.

Outdoor Unit	Indoor Units		Cooling Ratings				CFM	AHRI #
		10.8 600	6524085	ACNF24	XX16D*	17,		
DX13SN 0181A* (cont.)	CA*FA1714*6A*+MBVC1200**-1A*		18,200	13,200	13.5	11.5	600	203205371
	CA*FA1714*6A*+TXV	D*80VC0603B*A*	17,800	13,000	14.0	11.5	610	203204271
	CA*FA1714*6A*+TXV	D*80VC0803B*A*	17,800	13,000	14.0	11.5	610	203204273
	CA*FA1714*6A*+TXV	D*96VC0403BNA*	17,800	13,000	14.0	11.5	610	203204275
	CA*FA1714*6A*+TXV	D*96VC0603BNA*	17,800	13,000	14.0	11.5	620	203204277
	CA*FA1714*6A*+TXV	D*96VC0803BNA*	18,000	13,100	14.0	11.5	630	203204279
	CA*FA1714*6A*+TXV	D*96VE0303ANA*	17,800	13,000	13.5	11.0	615	203204281
	CA*FA1714*6A*+TXV	D*96VE0402BNA*	17,800	13,000	13.5	11.0	540	203204283
	CA*FA1714*6A*+TXV	D*96VE0403ANA*	17,800	13,000	13.5	11.0	615	203204285
	CA*FA1714*6A*+TXV	D*96VE0403BNA*	17,800	13,000	13.5	11.0	570	203204287
	CA*FA1714*6A*+TXV	D*96VE0603ANA*	18,000	13,100	13.5	11.0	545	203204290
	CA*FA1714*6A*+TXV	D*97MC0603BNA*	17,800	13,000	14.0	11.5	620	203204291
	CA*FA1714*6A*+TXV	D*97MC0803BNA*	18,000	13,100	14.0	11.5	600	203204294
	CAPFA1818*6A*	D*80VC0603B*A*	18,400	14,000	14.5	12.2	610	201953225
	CAPFA1818*6A*	D*80VC0803B*A*	18,400	14,000	14.5	12.2	610	201953227
	CAPFA1818*6A*	D*96VC0403BNA*	18,400	14,000	14.0	12.2	620	201953229
	CAPFA1818*6A*	D*96VC0603BNA*	18,400	14,000	14.0	12.2	620	201953231
	CAPFA1818*6A*	D*96VC0803BNA*	18,400	14,000	14.0	12.2	620	201953233
	CAPFA1818*6A*	D*97MC0603BNA*	18,400	14,000	14.0	12.2	620	201953235
	CAPFA1818*6A*	D*97MC0803BNA*	18,400	14,000	14.0	12.2	630	201953237
	CAPFA1818*6A*+EEP		18,200	13,900	13.0	11.2	600	201953224
	CAPFA1818*6A*+TXV	D*80VC0603B*A*	18,400	14,000	14.5	12.2	610	201953226
	CAPFA1818*6A*+TXV	D*80VC0803B*A*	18,400	14,000	14.5	12.2	610	201953228
	CAPFA1818*6A*+TXV	D*96VC0403BNA*	18,400	14,000	14.5	12.2	620	201953230
	CAPFA1818*6A*+TXV	D*96VC0603BNA*	18,400	14,000	14.5	12.2	620	201953232
	CAPFA1818*6A*+TXV	D*96VC0803BNA*	18,400	14,000	14.5	12.2	620	201953234
	CAPFA1818*6A*+TXV	D*97MC0603BNA*	18,400	14,000	14.5	12.2	620	201953236
	CAPFA1818*6A*+TXV	D*97MC0803BNA*	18,400	14,000	14.5	12.2	630	201953238
	CAPT3131*4A*	D*80HE0603B*A*	18,000	13,100	14.0	11.5	600	6524226
	CAPT3131*4A*	D*80VC0604B*A*	18,000	13,100	14.0	11.5	620	6524230
	CAPT3131*4A*	DD80VC0603B*A*	18,000	13,100	14.0	11.5	675	6525008
	CAPT3131*4A*	D*96VC0403BNA*	18,000	13,100	14.0	11.5	625	7360177
	CAPT3131*4A*	D*96VC0603BNA*	18,000	13,100	14.0	11.5	600	7360178
	CAPT3131*4A*	D*96VC0803BNA*	18,000	13,100	14.0	11.5	630	7360179
	CAPT3131*4A*	D*97MC0603BNA*	18,000	13,100	14.0	11.5	600	7360180
	CAPT3131*4A*	D*97MC0803BNA*	18,000	13,100	14.0	11.5	630	7360181
	CAPT3131*4A*	D*96VE0302BNA*	17,800	13,000	14.0	11.5	600	7367129
	CAPT3131*4A*	D*96VE0402BNA*	17,800	13,000	14.0	11.5	600	7367134
	CAPT3131*4A*	D*96VE0603BNA*	17,400	12,700	14.0	11.5	550	7367139
	CAPT3131*4A*	D*96VE0803BNA*	17,800	13,000	14.0	11.5	575	7367144
	CAPT3131*4A*	D*80VC0603B*A*	18,000	14,100	14.0	11.5	600	9949066
	CAPT3131*4A*	D*80VC0803B*A*	18,000	14,100	14.0	11.5	600	9949073
	CAPT3131*4A*	D*96VE0303ANA*	17800	14100	13.5	11.5	650	10516614
	CAPT3131*4A*	D*96VE0403ANA*	17800	14100	13.5	11.5	610	10516619
	CAPT3131*4A*	D*96VE0603ANA*	17400	13800	14	12	580	10516624
	CAPT3131*4A*+EEP		18,000	13,100	13.0	11.0	600	6524141
	CAPT3131*4A*+EEP+HSK		17,400	12,700	13.0	11.0	650	9114194
	CAPT3131*4A*+HSK	DD80VC0603B*A*	18,000	13,100	14.0	11.5	675	9114199
	CAPT3131*4A*+HSK	D*80HE0603B*A*	18,000	13,100	14.0	11.5	650	9114200

See Notes on Page 45.

Outdoor Unit	Indoor Units		Cooling Ratings				CFM	AHRI #
		10.8 600	6524085	ACNF24	XX16D*	17,		
DX13SN 0181A* (cont.)	CAPT3131*4A*+HSK	D*80VC0604B*A*	18,000	13,100	14.0	11.5	675	9114201
	CAPT3131*4A*+HSK	D*96VC0403BNA*	18,000	13,100	14.0	11.5	625	9114213
	CAPT3131*4A*+HSK	D*96VC0603BNA*	18,000	13,100	14.0	11.5	600	9114214
	CAPT3131*4A*+HSK	D*96VC0803BNA*	18,000	13,100	14.0	11.5	630	9114215
	CAPT3131*4A*+HSK	D*97MC0603BNA*	18,000	13,100	14.0	11.5	600	9114216
	CAPT3131*4A*+HSK	D*97MC0803BNA*	18,000	13,100	14.0	11.5	630	9114217
	CAPT3131*4A*+HSK	D*96VE0302BNA*	17,800	13,000	14.0	11.5	600	9114239
	CAPT3131*4A*+HSK	D*96VE0402BNA*	17,800	13,000	14.0	11.5	600	9114242
	CAPT3131*4A*+HSK	D*96VE0603BNA*	17,400	12,700	14.0	11.5	550	9114245
	CAPT3131*4A*+HSK	D*96VE0803BNA*	17,800	13,000	14.0	11.5	575	9114248
	CAPT3131*4A*+MBVC1200**-1A*		18,000	13,100	14.0	11.5	600	6524143
	CAPT3131*4A*+MBVC1200**-1A*+HSK		17,400	12,700	14.0	11.5	650	9114195
	CHPF1824A6C*+EEP		18,000	13,100	13.0	11.0	600	6524145
	CHPF2430B6C*	D*80HE0603B*A*	18,000	13,100	14.0	11.5	640	6524227
	CHPF2430B6C*	D*80VC0604B*A*	17,700	12,900	14.0	11.5	660	6524231
	CHPF2430B6C*	D*96VC0403BNA*	18,000	13,100	14.0	11.5	625	7360182
	CHPF2430B6C*	D*96VC0603BNA*	18,000	13,100	14.0	11.5	600	7360183
	CHPF2430B6C*	D*96VC0803BNA*	18,000	13,100	14.0	11.5	630	7360184
	CHPF2430B6C*	D*97MC0603BNA*	18,000	13,100	14.0	11.5	600	7360185
	CHPF2430B6C*	D*97MC0803BNA*	18,000	13,100	14.0	11.5	630	7360186
	CHPF2430B6C*	D*96VE0302BNA*	17,800	13,000	14.0	11.5	600	7367130
	CHPF2430B6C*	D*96VE0402BNA*	17,800	13,000	14.0	11.5	600	7367135
	CHPF2430B6C*	D*96VE0603BNA*	17,400	12,700	14.0	11.5	550	7367140
	CHPF2430B6C*	D*96VE0803BNA*	17,800	13,000	14.0	11.5	575	7367145
	CHPF2430B6C*	D*80VC0603B*A*	18,000	14,100	14.0	11.5	600	9948425
	CHPF2430B6C*	D*80VC0803B*A*	18,000	14,100	14.0	11.5	600	9948431
	CHPF2430B6C*	D*96VE0303ANA*	17800	14100	13.5	11.5	650	10516615
	CHPF2430B6C*	D*96VE0403ANA*	17800	14100	13.5	11.5	610	10516620
	CHPF2430B6C*	D*96VE0603ANA*	17400	13800	14	11.5	580	10516625
	CHPF2430B6C*+EEP		18,000	13,100	13.0	11.0	600	6524147
	CHPF2430B6C*+MBVC1200**-1A*		18,200	13,300	14.0	11.5	650	6524149
	CHPF2430B6C*+TXV	D*96VC0403BNA*	18,000	13,100	14.0	11.5	625	7360187
	CHPF2430B6C*+TXV	D*96VC0603BNA*	18,000	13,100	14.0	11.5	600	7360188
	CHPF2430B6C*+TXV	D*96VC0803BNA*	18,000	13,100	14.0	11.5	630	7360189
	CHPF2430B6C*+TXV	D*97MC0603BNA*	18,000	13,100	14.0	11.5	600	7360190
	CHPF2430B6C*+TXV	D*97MC0803BNA*	18,000	13,100	14.0	11.5	630	7360191
	CHPF2430B6C*+TXV	D*96VE0302BNA*	17,800	13,000	14.0	11.5	600	7367131
	CHPF2430B6C*+TXV	D*96VE0402BNA*	17,800	13,000	14.0	11.5	600	7367136
	CHPF2430B6C*+TXV	D*96VE0603BNA*	17,400	12,700	14.0	11.5	550	7367141
	CHPF2430B6C*+TXV	D*96VE0803BNA*	17,800	13,000	14.0	11.5	575	7367146
	CHPF2430B6C*+TXV	D*80VC0603B*A*	18,000	14,100	14.0	11.5	600	9949067
	CHPF2430B6C*+TXV	D*80VC0803B*A*	18,000	14,100	14.0	11.5	600	9949074
	CHPF2430B6C*+TXV	D*96VE0303ANA*	17800	14100	14	12	650	10516616
	CHPF2430B6C*+TXV	D*96VE0403ANA*	17800	14100	14	11.5	610	10516621
	CHPF2430B6C*+TXV	D*96VE0603ANA*	17400	13800	14	11.5	580	10516626
	CHPF2430B6C*+TXV+HSK	D*96VC0403BNA*	18,000	13,100	14.0	11.5	625	9114218
	CHPF2430B6C*+TXV+HSK	D*96VC0603BNA*	18,000	13,100	14.0	11.5	600	9114219
	CHPF2430B6C*+TXV+HSK	D*96VC0803BNA*	18,000	13,100	14.0	11.5	630	9114220
	CHPF2430B6C*+TXV+HSK	D*97MC0603BNA*	18,000	13,100	14.0	11.5	600	9114221

See Notes on Page 45.

Outdoor Unit	Indoor Units		Cooling Ratings				CFM	AHRI #
		10.8 600	6524085	ACNF24	XX16D*	17,		
DX13SN 0181A* (cont.)	CHPF2430B6C*+TXV+HSK	D*97MC0803BNA*	18,000	13,100	14.0	11.5	630	9114222
	CHPF2430B6C*+TXV+HSK	D*96VE0302BNA*	17,800	13,000	14.0	11.5	600	9114240
	CHPF2430B6C*+TXV+HSK	D*96VE0402BNA*	17,800	13,000	14.0	11.5	600	9114243
	CHPF2430B6C*+TXV+HSK	D*96VE0603BNA*	17,400	12,700	14.0	11.5	550	9114246
	CHPF2430B6C*+TXV+HSK	D*96VE0803BNA*	17,800	13,000	14.0	11.5	575	9114249
	CHPF3636B6C*	D*96VC0403BNA*	18,200	13,300	14.0	11.5	625	7360192
	CHPF3636B6C*	D*96VC0603BNA*	18,200	13,300	14.0	11.5	600	7360193
	CHPF3636B6C*	D*96VC0803BNA*	18,200	13,300	14.0	11.5	630	7360194
	CHPF3636B6C*	D*97MC0603BNA*	18,200	13,300	14.0	11.5	600	7360195
	CHPF3636B6C*	D*97MC0803BNA*	18,200	13,300	14.0	11.5	630	7360196
	CHPF3636B6C*	D*80VC0603B*A*	17,600	13,800	14.0	11.5	600	9948426
	CHPF3636B6C*	D*80VC0803B*A*	17,600	13,800	14.0	11.5	600	9948432
	CHPF3636B6C*+TXV	D*96VC0403BNA*	18,200	13,300	14.0	11.5	625	7360197
	CHPF3636B6C*+TXV	D*96VC0603BNA*	18,200	13,300	14.0	11.5	600	7360198
	CHPF3636B6C*+TXV	D*96VC0803BNA*	18,200	13,300	14.0	11.5	630	7360199
	CHPF3636B6C*+TXV	D*97MC0603BNA*	18,200	13,300	14.0	11.5	600	7360200
	CHPF3636B6C*+TXV	D*97MC0803BNA*	18,200	13,300	14.0	11.5	630	7360201
	CHPF3636B6C*+TXV	D*80VC0603B*A*	17,600	13,800	14.0	11.5	600	9949068
	CHPF3636B6C*+TXV	D*80VC0803B*A*	17,600	13,800	14.0	11.5	600	9949075
	CHPF3636B6C*+TXV+HSK	D*96VC0403BNA*	18,200	13,300	14.0	11.5	625	9114223
	CHPF3636B6C*+TXV+HSK	D*96VC0603BNA*	18,200	13,300	14.0	11.5	600	9114224
	CHPF3636B6C*+TXV+HSK	D*96VC0803BNA*	18,200	13,300	14.0	11.5	630	9114225
	CHPF3636B6C*+TXV+HSK	D*97MC0603BNA*	18,200	13,300	14.0	11.5	600	9114226
	CHPF3636B6C*+TXV+HSK	D*97MC0803BNA*	18,200	13,300	14.0	11.5	630	9114227
	CSCF1824N6D*	D*80HE0603B*A*	18,000	13,100	14.0	11.5	640	6524228
	CSCF1824N6D*	D*80VC0604B*A*	17,700	12,900	14.0	11.5	660	6524232
	CSCF1824N6D*	D*96VC0403BNA*	18,000	13,100	14.0	11.5	625	7360202
	CSCF1824N6D*	D*96VC0603BNA*	18,000	13,100	14.0	11.5	600	7360203
	CSCF1824N6D*	D*96VC0803BNA*	18,000	13,100	14.0	11.5	630	7360204
	CSCF1824N6D*	D*97MC0603BNA*	18,000	13,100	14.0	11.5	600	7360205
	CSCF1824N6D*	D*97MC0803BNA*	18,000	13,100	14.0	11.5	630	7360206
	CSCF1824N6D*	D*80VC0603B*A*	18,000	14,100	14.0	11.5	600	9948427
	CSCF1824N6D*	D*80VC0803B*A*	18,000	14,100	14.0	11.5	600	9948433
	CSCF1824N6D*+EEP		18,000	13,100	13.0	11.0	600	6524151
	CSCF1824N6D*+TXV	D*96VC0403BNA*	18,000	13,100	14.0	11.5	625	7360207
	CSCF1824N6D*+TXV	D*96VC0603BNA*	18,000	13,100	14.0	11.5	600	7360208
	CSCF1824N6D*+TXV	D*96VC0803BNA*	18,000	13,100	14.0	11.5	630	7360209
	CSCF1824N6D*+TXV	D*97MC0603BNA*	18,000	13,100	14.0	11.5	600	7360210
	CSCF1824N6D*+TXV	D*97MC0803BNA*	18,000	13,100	14.0	11.5	630	7360211
	CSCF1824N6D*+TXV	D*80VC0603B*A*	18,000	14,100	14.0	11.5	600	9949069
	CSCF1824N6D*+TXV	D*80VC0803B*A*	18,000	14,100	14.0	11.5	600	9949076
	CSCF1824N6D*+TXV+HSK	D*96VC0403BNA*	18,000	13,100	14.0	11.5	625	9114233
	CSCF1824N6D*+TXV+HSK	D*96VC0603BNA*	18,000	13,100	14.0	11.5	600	9114234
	CSCF1824N6D*+TXV+HSK	D*96VC0803BNA*	18,000	13,100	14.0	11.5	630	9114235
	CSCF1824N6D*+TXV+HSK	D*97MC0603BNA*	18,000	13,100	14.0	11.5	600	9114236
	CSCF1824N6D*+TXV+HSK	D*97MC0803BNA*	18,000	13,100	14.0	11.5	630	9114237
	CSCF3036N6D*	D*96VC0403BNA*	18,200	13,300	14.0	11.5	625	7360212
	CSCF3036N6D*	D*96VC0603BNA*	18,200	13,300	14.0	11.5	600	7360213
	CSCF3036N6D*	D*96VC0803BNA*	18,200	13,300	14.0	11.5	630	7360214
	CSCF3036N6D*	D*97MC0603BNA*	18,200	13,300	14.0	11.5	600	7360215
	CSCF3036N6D*	D*97MC0803BNA*	18,200	13,300	14.0	11.5	630	7360216

See Notes on Page 45.

Outdoor Unit	Indoor Units		Cooling Ratings				CFM	AHRI #
		10.8 600	6524085	ACNF24	XX16D*	17,		
DX13SN 0181A* (cont.)	CSCF3036N6D*	D*80VC0603B*A*	17,800	13,900	14.0	11.5	600	9948428
	CSCF3036N6D*	D*80VC0803B*A*	17,800	13,900	14.0	11.5	600	9948434
	CSCF3036N6D*+TXV	D*96VC0403BNA*	18,200	13,300	14.0	11.5	625	7360217
	CSCF3036N6D*+TXV	D*96VC0603BNA*	18,200	13,300	14.0	11.5	600	7360218
	CSCF3036N6D*+TXV	D*96VC0803BNA*	18,200	13,300	14.0	11.5	630	7360219
	CSCF3036N6D*+TXV	D*97MC0603BNA*	18,200	13,300	14.0	11.5	600	7360220
	CSCF3036N6D*+TXV	D*97MC0803BNA*	18,200	13,300	14.0	11.5	630	7360221
	CSCF3036N6D*+TXV	D*80VC0603B*A*	17,800	13,900	14.0	11.5	600	9949070
	CSCF3036N6D*+TXV	D*80VC0803B*A*	17,800	13,900	14.0	11.5	600	9949077
	CSCF3036N6D*+TXV+HSK	D*96VC0403BNA*	18,200	13,300	14.0	11.5	625	9114228
	CSCF3036N6D*+TXV+HSK	D*96VC0603BNA*	18,200	13,300	14.0	11.5	600	9114229
	CSCF3036N6D*+TXV+HSK	D*96VC0803BNA*	18,200	13,300	14.0	11.5	630	9114230
	CSCF3036N6D*+TXV+HSK	D*97MC0603BNA*	18,200	13,300	14.0	11.5	600	9114231
	CSCF3036N6D*+TXV+HSK	D*97MC0803BNA*	18,200	13,300	14.0	11.5	630	9114232
	DV24PTCB14A*		17,600	12,800	14.0	12.0	600	6524118
	DV24PTCB14A*+HSK		17,600	12,800	14.0	12.0	600	9114197
	DV25PTCB14A*		17,800	13,000	14.0	12.0	640	8996414
	DV25PTCB14A*+HSK		17,800	13,000	14.0	12.0	640	9114252
	DV29PTCB14A*		18,000	13,100	14.0	12.0	585	8996415
	DV29PTCB14A*+HSK		18,000	13,100	14.0	12.0	585	9114253
	DV30PTCC14A*		18,000	13,100	14.0	12.0	615	6524122
	DV30PTCC14A*+HSK		18,000	13,100	14.0	12.0	615	9114198
DX13SN 0241B*	ACNF24XX16D*		22,400	16,600	13.0	11.0	770	9039364
	ACNF30XX16D*		22,600	16,700	13.0	11.0	845	9039371
	ARUF24B14C*+TXV+HSK		22,000	16,300	13.0	11.0	800	9039363
	ARUF29B14A*		23,400	17,300	13.0	11.0	860	9039368
	ASPT24B14A*+HSK		23,000	17,000	13.8	11.8	810	9039374
	ASPT25B14A*+HSK		23,000	17,000	14.0	12.0	800	9039393
	ASPT29B14A*+HSK		23,800	17,600	14.0	12.0	790	9039493
	ASPT30C14A*+HSK		23,400	17,300	14.0	12.0	845	9039459
	AVPTC24B14A*+HSK		22,600	16,700	14.0	12.0	800	9039375
	AVPTC30C14A*+HSK		23,400	17,300	14.0	12.0	780	9039469
	ASPT33C14B*+HSK		23,400	17,300	14.0	12.0	820	201834877
	AWUF24XX16B*		23,000	17,000	13.0	11.0	800	9039367
	AWUF30XX16B*		23,200	17,200	13.0	11.0	800	9039373
	AWUF31XX16A*		23,000	17,000	14.0	11.3	800	9039400
	AWUF32XX16A*		23,000	17,000	14.0	11.3	800	9039382
	CA*F1824*6D*	D*96VE0303ANA*	23000	17000	13.5	11.5	800	10516630
	CA*F1824*6D*	D*96VE0403ANA*	23000	17000	13.5	11.5	800	10516635
	CA*F1824*6D*	D*96VE0603ANA*	23000	17000	13.5	11.5	775	10516627
	CA*F1824*6D*	D*80VC0603B*A*	23,000	17,500	14.0	11.5	800	9948435
	CA*F1824*6D*	D*80VC0803B*A*	23,000	17,500	14.0	11.5	750	9948448
	CA*F1824*6D*	D*80VC0804C*A*	23,000	17,500	14.0	11.6	800	9948461
	CA*F1824*6D*	D*97MC0603BNA*	23,000	17,000	14.0	11.5	815	9039416
	CA*F1824*6D*	D*97MC0804CNA*	23,000	17,000	14.0	11.5	800	9039415
	CA*F1824*6D*	D*96VC0603BNA*	23,000	17,000	14.0	11.5	815	9039417
	CA*F1824*6D*	D*96VE0402BNA*	23,000	17,000	14.0	11.5	775	9039414
	CA*F1824*6D*	D*96VE0603BNA*	23,000	17,000	14.0	11.5	775	9039436
	CA*F1824*6D*	D*96VC0804CNA*	23,000	17,000	14.0	11.5	800	9039381
	CA*F1824*6D*	D*80VC0604B*A*	23,000	17,000	14.0	11.6	820	9039378

See Notes on Page 45.

Outdoor Unit	Indoor Units		Cooling Ratings				CFM	AHRI #
		10.8 600	6524085	ACNF24	XX16D*	17,		
DX13SN 0241B* (cont.)	CA*F1824*6D*	D*80HE0603B*A*	23,000	17,000	14.0	11.5	860	9039396
	CA*F1824*6D*	D*97MC0803BNA*	23,000	17,000	14.0	11.5	810	9039403
	CA*F1824*6D*	D*96VE0803BNA*	23,000	17,000	14.0	11.5	775	9039428
	CA*F1824*6D*	D*96VE0302BNA*	23,000	17,000	14.0	11.5	800	9039424
	CA*F1824*6D*	D*96VC0803BNA*	23,000	17,000	14.0	11.5	810	9039390
	CA*F1824*6D*	D*96VC0403BNA*	23,000	17,000	14.0	11.5	805	9039388
	CA*F1824*6D*+EEP		23,000	17,000	13.0	11.0	800	9039370
	CA*F1824*6D*+MBVC1200**-1A*		23,000	17,000	14.0	11.5	800	9039406
	CA*F1824*6D*+TXV+HSK	D*96VE0303ANA*	23000	17000	14	11.5	800	10516631
	CA*F1824*6D*+TXV+HSK	D*96VE0403ANA*	23000	17000	14	11.5	800	10516636
	CA*F1824*6D*+TXV+HSK	D*96VE0603ANA*	23,000	17,000	14	11.5	775	10516628
	CA*F1824*6D*+TXV+HSK	D*80VC0603B*A*	23,000	17,500	14.0	11.5	800	9948436
	CA*F1824*6D*+TXV+HSK	D*80VC0803B*A*	23,000	17,500	14.0	11.5	750	9948449
	CA*F1824*6D*+TXV+HSK	D*96VC0804CNA*	23,000	17,000	14.0	11.5	800	9039394
	CA*F1824*6D*+TXV+HSK	D*97MC0603BNA*	23,000	17,000	14.0	11.5	815	9039383
	CA*F1824*6D*+TXV+HSK	D*96VE0803BNA*	23,000	17,000	14.0	11.5	775	9039389
	CA*F1824*6D*+TXV+HSK	D*96VE0402BNA*	23,000	17,000	14.0	11.5	775	9039440
	CA*F1824*6D*+TXV+HSK	D*96VE0603BNA*	23,000	17,000	14.0	11.5	775	9039395
	CA*F1824*6D*+TXV+HSK	D*96VC0803BNA*	23,000	17,000	14.0	11.5	810	9039385
	CA*F1824*6D*+TXV+HSK	D*96VC0603BNA*	23,000	17,000	14.0	11.5	815	9039432
	CA*F1824*6D*+TXV+HSK	D*97MC0804CNA*	23,000	17,000	14.0	11.5	800	9039404
	CA*F1824*6D*+TXV+HSK	D*96VE0302BNA*	23,000	17,000	14.0	11.5	800	9039399
	CA*F1824*6D*+TXV+HSK	D*96VC0403BNA*	23,000	17,000	14.0	11.5	805	9039410
	CA*F1824*6D*+TXV+HSK	D*97MC0803BNA*	23,000	17,000	14.0	11.5	810	9039420
	CA*F3030*6D*+EEP		23,000	17,000	13.0	11.0	800	9039358
	CA*F3030*6D*+EEP+TXV+HSK		23,000	17,000	13.0	11.0	800	9039357
	CA*F3131*6D*+EEP		23,000	17,000	13.0	11.0	800	9039366
	CA*F3131*6D*+EEP+TXV+HSK		23,000	17,000	13.0	11.0	800	9039365
	CA*F3636*6D*	D*80VC0603B*A*	23,000	17,500	14.0	11.5	800	9948437
	CA*F3636*6D*	D*80VC0803B*A*	23,000	17,500	14.0	11.5	750	9948450
	CA*F3636*6D*	D*97MC0603BNA*	23,600	17,500	14.0	11.5	815	9039461
	CA*F3636*6D*	D*96VC0803BNA*	23,600	17,500	14.0	11.5	810	9039496
	CA*F3636*6D*	D*97MC0803BNA*	23,600	17,500	14.0	11.5	810	9039454
	CA*F3636*6D*	D*96VC0603BNA*	23,600	17,500	14.0	11.5	815	9039483
	CA*F3636*6D*	D*96VC0403BNA*	23,600	17,500	14.0	11.5	805	9039456
	CA*F3636*6D*+EEP		23,000	17,000	13.0	11.0	800	9039369
	CA*F3636*6D*+EEP+TXV+HSK		23,000	17,000	13.0	11.0	800	9039362
	CA*F3636*6D*+TXV+HSK	D*80VC0603B*A*	23,000	17,500	14.0	11.5	800	9948438
	CA*F3636*6D*+TXV+HSK	D*80VC0803B*A*	23,000	17,500	14.0	11.5	750	9948451
	CA*F3636*6D*+TXV+HSK	D*96VC0803BNA*	23,600	17,500	14.0	11.5	810	9039480
	CA*F3636*6D*+TXV+HSK	D*96VC0603BNA*	23,600	17,500	14.0	11.5	815	9039471
	CA*F3636*6D*+TXV+HSK	D*96VC0403BNA*	23,600	17,500	14.0	11.5	805	9039464
	CA*F3636*6D*+TXV+HSK	D*97MC0603BNA*	23,600	17,500	14.0	11.5	815	9039487
	CA*F3636*6D*+TXV+HSK	D*97MC0803BNA*	23,600	17,500	14.0	11.5	810	9039466
	CA*F3743*6D*	D*97MC0804CNA*	23,600	17,500	14.0	11.5	800	9039484
	CA*F3743*6D*	D*96VC0804CNA*	23,600	17,500	14.0	11.5	800	9039465
	CA*F3743*6D*+TXV+HSK	D*97MC0804CNA*	23,600	17,500	14.0	11.5	800	9039473
	CA*F3743*6D*+TXV+HSK	D*96VC0804CNA*	23,600	17,500	14.0	11.5	800	9039453

See Notes on Page 45.

Outdoor Unit	Indoor Units		Cooling Ratings				CFM	AHRI #
		10.8 600	6524085	ACNF24	XX16D*	17,		
DX13SN 0241B* (cont.)	CA*FA2318*6A*	D*80VC0603B*A*	22,600	17,500	14.0	11.5	820	202918716
	CA*FA2318*6A*	D*80VC0604B*A*	22,600	17,500	14.0	11.5	810	202918718
	CA*FA2318*6A*	D*80VC0803B*A*	22,600	17,500	14.0	11.5	770	202918720
	CA*FA2318*6A*	D*80VC0804C*A*	22,600	17,500	14.0	11.5	760	202918722
	CA*FA2318*6A*	D*80VC0805C*A*	22,600	17,500	14.0	11.5	810	202918724
	CA*FA2318*6A*	D*96VE0303ANA*	22,600	17,500	13.5	11.5	770	202918726
	CA*FA2318*6A*	D*96VE0402BNA*	22,600	17,500	14.0	11.5	710	202918728
	CA*FA2318*6A*	D*96VC0403BNA*	22,600	17,500	14.0	11.5	800	202918729
	CA*FA2318*6A*	D*96VC0603BNA*	22,600	17,500	14.0	11.5	820	202918731
	CA*FA2318*6A*	D*96VC0803BNA*	22,600	17,500	14.0	11.5	820	202918733
	CA*FA2318*6A*	D*96VC0804CNA*	22,600	17,500	14.0	11.5	775	202918735
	CA*FA2318*6A*	D*97MC0603BNA*	22,600	17,500	14.0	11.5	820	202918737
	CA*FA2318*6A*	D*97MC0803BNA*	22,600	17,500	14.0	11.5	820	202918739
	CA*FA2318*6A*	D*97MC0804CNA*	22,600	17,500	14.0	11.5	775	202918741
	CA*FA2318*6A*	D*96VE0403ANA*	22,600	17,500	13.5	11.5	770	202918744
	CA*FA2318*6A*	D*96VE0403BNA*	22,600	17,500	14.0	11.5	760	202918746
	CA*FA2318*6A*	D*96VE0603ANA*	22,600	17,500	13.5	11.5	720	202918748
	CA*FA2318*6A*	D*96VE0803BNA*	22,600	17,500	14.0	11.5	700	202918750
	CA*FA2318*6A*	D*80HE0603B*A*	22,600	17,500	14.0	11.5	815	202918752
	CA*FA2318*6A*	D*96VE0603BNB*	22,600	17,500	13.5	11.5	730	202918754
	CA*FA2318*6A*+EEP		22,800	17,600	13.0	11.0	740	203209214
	CA*FA2318*6A*+MBVC1200**-1A*		22,600	17,500	14.0	11.5	740	202918714
	CA*FA2318*6A*+MBVC1200**-1A*+TXV+HSK		22,600	17,500	14.0	11.5	740	202918715
	CA*FA2318*6A*+TXV+HSK	D*80VC0603B*A*	22,600	17,500	14.0	11.5	820	202918717
	CA*FA2318*6A*+TXV+HSK	D*80VC0604B*A*	22,600	17,500	14.0	11.5	810	202918719
	CA*FA2318*6A*+TXV+HSK	D*80VC0803B*A*	22,600	17,500	14.0	11.5	770	202918721
	CA*FA2318*6A*+TXV+HSK	D*80VC0804C*A*	22,600	17,500	14.0	11.5	760	202918723
	CA*FA2318*6A*+TXV+HSK	D*80VC0805C*A*	22,600	17,500	14.0	11.5	810	202918725
	CA*FA2318*6A*+TXV+HSK	D*96VE0303ANA*	22,600	17,500	14.0	11.5	770	202918727
	CA*FA2318*6A*+TXV+HSK	D*96VC0403BNA*	22,600	17,500	14.0	11.5	800	202918730
	CA*FA2318*6A*+TXV+HSK	D*96VC0603BNA*	22,600	17,500	14.0	11.5	820	202918732
	CA*FA2318*6A*+TXV+HSK	D*96VC0803BNA*	22,600	17,500	14.0	11.5	820	202918734
	CA*FA2318*6A*+TXV+HSK	D*96VC0804CNA*	22,600	17,500	14.0	11.5	775	202918736
	CA*FA2318*6A*+TXV+HSK	D*97MC0603BNA*	22,600	17,500	14.0	11.5	820	202918738
	CA*FA2318*6A*+TXV+HSK	D*97MC0803BNA*	22,600	17,500	14.0	11.5	820	202918740
	CA*FA2318*6A*+TXV+HSK	D*97MC0804CNA*	22,600	17,500	14.0	11.5	775	202918742
	CA*FA2318*6A*+TXV+HSK	D*96VE0402BNA*	22,600	17,500	14.0	11.5	710	202918743
	CA*FA2318*6A*+TXV+HSK	D*96VE0403ANA*	22,600	17,500	14.0	11.5	770	202918745
	CA*FA2318*6A*+TXV+HSK	D*96VE0403BNA*	22,600	17,500	14.0	11.5	760	202918747
	CA*FA2318*6A*+TXV+HSK	D*96VE0603ANA*	22,600	17,500	14.0	11.5	720	202918749
	CA*FA2318*6A*+TXV+HSK	D*96VE0803BNA*	22,600	17,500	14.0	11.5	700	202918751
	CA*FA2318*6A*+TXV+HSK	D*80HE0603B*A*	22,600	17,500	14.0	11.5	815	202918753
	CA*FA2318*6A*+TXV+HSK	D*96VE0603BNB*	22,600	17,500	14.0	11.5	730	202918755
	CAPT3131*4A*+EEP+HSK		22,400	16,600	13.0	11.0	800	9039356
	CAPT3131*4A*+HSK	D*96VE0303ANA*	23,000	17,000	13.5	11.5	800	10516632
	CAPT3131*4A*+HSK	D*96VE0403ANA*	23,000	17,000	13.5	11.5	800	10516637
	CAPT3131*4A*+HSK	D*96VE0603ANA*	23,000	17,000	13.5	11.5	775	10516629
	CAPT3131*4A*+HSK	D*80VC0603B*A*	23,000	17,500	14.0	11.5	800	9948439

See Notes on Page 45.

Outdoor Unit	Indoor Units		Cooling Ratings				CFM	AHRI #
		10.8 600	6524085	ACNF24	XX16D*	17,		
DX13SN 0241B* (cont.)	CAPT3131*4A*+HSK	D*80VC0803B*A*	23,000	17,500	14.0	11.5	750	9948452
	CAPT3131*4A*+HSK	D*96VC0804CNA*	23,000	17,000	14.0	11.5	800	9039419
	CAPT3131*4A*+HSK	D*80VC0604B*A*	23,000	17,000	14.0	11.5	830	9039391
	CAPT3131*4A*+HSK	D*97MC0804CNA*	23,000	17,000	14.0	11.5	800	9039435
	CAPT3131*4A*+HSK	D*96VC0803BNA*	23,000	17,000	14.0	11.5	810	9039384
	CAPT3131*4A*+HSK	D*97MC0603BNA*	23,000	17,000	14.0	11.5	815	9039431
	CAPT3131*4A*+HSK	D*96VE0603BNA*	23,000	17,000	14.0	11.5	775	9039434
	CAPT3131*4A*+HSK	D*97MC0803BNA*	23,000	17,000	14.0	11.5	810	9039380
	CAPT3131*4A*+HSK	D*96VE0302BNA*	23,000	17,000	14.0	11.5	800	9039427
	CAPT3131*4A*+HSK	D*96VC0403BNA*	23,000	17,000	14.0	11.5	805	9039398
	CAPT3131*4A*+HSK	D*96VE0803BNA*	23,000	17,000	14.0	11.5	775	9039426
	CAPT3131*4A*+HSK	D*96VE0402BNA*	23,000	17,000	14.0	11.5	775	9039412
	CAPT3131*4A*+HSK	D*96VC0603BNA*	23,000	17,000	14.0	11.5	815	9039379
	CAPT3131*4A*+HSK	D*80HE0603B*A*	23,000	17,000	14.0	11.5	800	9039401
	CAPT3131*4A*+MBVC1200**-1A*+HSK		22,800	16,900	14.0	11.5	800	9039376
	CAPT3743*4A*+HSK	D*96VC0804CNA*	23,600	17,500	14.0	11.5	800	9039489
	CAPT3743*4A*+HSK	D*97MC0804CNA*	23,600	17,500	14.0	11.5	800	9039479
	CHPF1824A6C*+EEP		23,000	17,000	13.0	11.0	800	9039372
	CHPF2430B6C*	D*96VE0303ANA*	23,000	17,000	13.5	11.5	800	10516633
	CHPF2430B6C*	D*96VE0403ANA*	23,000	17,000	13.5	11.5	800	10516638
	CHPF2430B6C*	D*96VE0603ANA*	23,000	17,000	13.5	11.5	775	10516640
	CHPF2430B6C*	D*80VC0603B*A*	23,000	17,500	14.0	11.5	800	9948440
	CHPF2430B6C*	D*80VC0803B*A*	23,000	17,500	14.0	11.5	750	9948453
	CHPF2430B6C*	D*97MC0603BNA*	23,200	17,200	14.0	11.5	815	9039485
	CHPF2430B6C*	D*96VE0402BNA*	23,000	17,000	14.0	11.5	775	9039423
	CHPF2430B6C*	D*96VC0803BNA*	23,200	17,200	14.0	11.5	810	9039474
	CHPF2430B6C*	D*96VE0803BNA*	23,000	17,000	14.0	11.5	775	9039433
	CHPF2430B6C*	D*97MC0803BNA*	23,200	17,200	14.0	11.5	810	9039463
	CHPF2430B6C*	D*96VC0603BNA*	23,200	17,200	14.0	11.5	815	9039458
	CHPF2430B6C*	D*96VC0403BNA*	23,200	17,200	14.0	11.5	805	9039470
	CHPF2430B6C*	D*80HE0603B*A*	23,000	17,000	14.0	11.5	860	9039411
	CHPF2430B6C*	D*96VE0302BNA*	23,000	17,000	14.0	11.5	800	9039392
	CHPF2430B6C*	D*96VE0603BNA*	23,000	17,000	14.0	11.5	775	9039422
	CHPF2430B6C*+EEP		23,000	17,000	13.0	11.0	800	9039361
	CHPF2430B6C*+MBVC1200**-1A*		23,400	17,300	14.0	11.5	800	9039478
	CHPF2430B6C*+TXV+HSK	D*96VE0303ANA*	23,000	17,000	14.0	11.5	800	10516634
	CHPF2430B6C*+TXV+HSK	D*96VE0403ANA*	23,000	17,000	14.0	11.5	800	10516639
	CHPF2430B6C*+TXV+HSK	D*96VE0603ANA*	23,000	17,000	14.0	11.5	775	10516641
	CHPF2430B6C*+TXV+HSK	D*80VC0603B*A*	23,000	17,500	14.0	11.5	800	9948441
	CHPF2430B6C*+TXV+HSK	D*80VC0803B*A*	23,000	17,500	14.0	11.5	750	9948454
	CHPF2430B6C*+TXV+HSK	D*96VE0402BNA*	23,000	17,000	14.0	11.5	775	9039386
	CHPF2430B6C*+TXV+HSK	D*97MC0603BNA*	23,200	17,200	14.0	11.5	815	9039481
	CHPF2430B6C*+TXV+HSK	D*96VC0403BNA*	23,200	17,200	14.0	11.5	805	9039450
	CHPF2430B6C*+TXV+HSK	D*96VE0302BNA*	23,000	17,000	14.0	11.5	800	9039439
	CHPF2430B6C*+TXV+HSK	D*96VC0603BNA*	23,200	17,200	14.0	11.5	815	9039441
	CHPF2430B6C*+TXV+HSK	D*96VC0803BNA*	23,200	17,200	14.0	11.5	810	9039498
	CHPF2430B6C*+TXV+HSK	D*96VE0603BNA*	23,000	17,000	14.0	11.5	775	9039387
	CHPF2430B6C*+TXV+HSK	D*97MC0803BNA*	23,200	17,200	14.0	11.5	810	9039448
	CHPF2430B6C*+TXV+HSK	D*96VE0803BNA*	23,000	17,000	14.0	11.5	775	9039402

See Notes on Page 45.

Outdoor Unit	Indoor Units		Cooling Ratings				CFM	AHRI #
		10.8 600	6524085	ACNF24	XX16D*	17,		
DX13SN 0241B* (cont.)	CHPF3636B6C*	D*80VC0603B*A*	23,400	17,800	14.0	11.5	800	9948442
	CHPF3636B6C*	D*80VC0803B*A*	23,400	17,800	14.0	11.5	750	9948455
	CHPF3636B6C*	D*96VC0403BNA*	23,400	17,300	14.0	11.5	805	9039442
	CHPF3636B6C*	D*97MC0603BNA*	23,400	17,300	14.0	11.5	815	9039494
	CHPF3636B6C*	D*97MC0803BNA*	23,400	17,300	14.0	11.5	810	9039455
	CHPF3636B6C*	D*96VC0603BNA*	23,400	17,300	14.0	11.5	815	9039488
	CHPF3636B6C*	D*96VC0803BNA*	23,400	17,300	14.0	11.5	810	9039445
	CHPF3636B6C*+TXV+HSK	D*80VC0603B*A*	23,400	17,800	14.0	11.5	800	9948443
	CHPF3636B6C*+TXV+HSK	D*80VC0803B*A*	23,400	17,800	14.0	11.5	750	9948456
	CHPF3636B6C*+TXV+HSK	D*97MC0803BNA*	23,400	17,300	14.0	11.5	810	9039451
	CHPF3636B6C*+TXV+HSK	D*96VC0803BNA*	23,400	17,300	14.0	11.5	810	9039491
	CHPF3636B6C*+TXV+HSK	D*97MC0603BNA*	23,400	17,300	14.0	11.5	815	9039475
	CHPF3636B6C*+TXV+HSK	D*96VC0603BNA*	23,400	17,300	14.0	11.5	815	9039497
	CHPF3636B6C*+TXV+HSK	D*96VC0403BNA*	23,400	17,300	14.0	11.5	805	9039482
	CHPF3642C6C*	D*96VC0804CNA*	23,400	17,300	14.0	11.5	800	9039486
	CHPF3642C6C*	D*97MC0804CNA*	23,400	17,300	14.0	11.5	800	9039443
	CHPF3642C6C*+TXV+HSK	D*97MC0804CNA*	23,400	17,300	14.0	11.5	800	9039462
	CHPF3642C6C*+TXV+HSK	D*96VC0804CNA*	23,400	17,300	14.0	11.5	800	9039477
	CSCF1824N6D*	D*80VC0603B*A*	23,000	17,500	14.0	11.5	800	9948444
	CSCF1824N6D*	D*80VC0803B*A*	23,000	17,500	14.0	11.5	750	9948457
	CSCF1824N6D*	D*97MC0804CNA*	23,000	17,000	14.0	11.5	800	9039413
	CSCF1824N6D*	D*97MC0803BNA*	23,000	17,000	14.0	11.5	810	9039429
	CSCF1824N6D*	D*96VC0804CNA*	23,000	17,000	14.0	11.5	800	9039438
	CSCF1824N6D*	D*96VC0603BNA*	23,000	17,000	14.0	11.5	815	9039397
	CSCF1824N6D*	D*96VC0403BNA*	23,000	17,000	14.0	11.5	805	9039425
	CSCF1824N6D*	D*96VC0803BNA*	23,000	17,000	14.0	11.5	810	9039437
	CSCF1824N6D*	D*97MC0603BNA*	23,000	17,000	14.0	11.5	815	9039405
	CSCF1824N6D*+EEP		23,000	17,000	13.0	11.0	800	9039359
	CSCF1824N6D*+TXV+HSK	D*80VC0603B*A*	23,000	17,500	14.0	11.5	800	9948445
	CSCF1824N6D*+TXV+HSK	D*80VC0803B*A*	23,000	17,500	14.0	11.5	750	9948458
	CSCF1824N6D*+TXV+HSK	D*97MC0803BNA*	23,000	17,000	14.0	11.5	810	9039407
	CSCF1824N6D*+TXV+HSK	D*97MC0804CNA*	23,000	17,000	14.0	11.5	800	9039421
	CSCF1824N6D*+TXV+HSK	D*96VC0804CNA*	23,000	17,000	14.0	11.5	800	9039430
	CSCF1824N6D*+TXV+HSK	D*97MC0603BNA*	23,000	17,000	14.0	11.5	815	9039409
	CSCF1824N6D*+TXV+HSK	D*96VC0803BNA*	23,000	17,000	14.0	11.5	810	9039418
	CSCF1824N6D*+TXV+HSK	D*96VC0403BNA*	23,000	17,000	14.0	11.5	805	9039408
	CSCF1824N6D*+TXV+HSK	D*96VC0603BNA*	23,000	17,000	14.0	11.5	815	9039377
	CSCF3036N6D*	D*80VC0603B*A*	23,200	17,700	14.0	11.5	800	9948446
	CSCF3036N6D*	D*80VC0803B*A*	23,200	17,700	14.0	11.5	750	9948459
	CSCF3036N6D*	D*97MC0803BNA*	23,200	17,200	14.0	11.5	810	9039476
	CSCF3036N6D*	D*96VC0803BNA*	23,200	17,200	14.0	11.5	810	9039449
	CSCF3036N6D*	D*96VC0403BNA*	23,200	17,200	14.0	11.5	805	9039447
	CSCF3036N6D*	D*96VC0603BNA*	23,200	17,200	14.0	11.5	815	9039468
	CSCF3036N6D*	D*97MC0603BNA*	23,200	17,200	14.0	11.5	815	9039492
	CSCF3036N6D*	D*96VC0804CNA*	23,200	17,200	14.0	11.5	800	9039472
	CSCF3036N6D*	D*97MC0804CNA*	23,200	17,200	14.0	11.5	800	9039467
	CSCF3036N6D*+TXV+HSK	D*80VC0603B*A*	23,200	17,700	14.0	11.5	800	9948447
	CSCF3036N6D*+TXV+HSK	D*80VC0803B*A*	23,200	17,700	14.0	11.5	750	9948460

See Notes on Page 45.

Outdoor Unit	Indoor Units		Cooling Ratings				CFM	AHRI #
		10.8 600	6524085	ACNF24	XX16D*	17,		
DX13SN 0241B* (cont.)	CSCF3036N6D*+TXV+HSK	D*96VC0403BNA*	23,200	17,200	14.0	11.5	805	9039460
	CSCF3036N6D*+TXV+HSK	D*96VC0603BNA*	23,200	17,200	14.0	11.5	815	9039452
	CSCF3036N6D*+TXV+HSK	D*97MC0803BNA*	23,200	17,200	14.0	11.5	810	9039444
	CSCF3036N6D*+TXV+HSK	D*96VC0803BNA*	23,200	17,200	14.0	11.5	810	9039446
	CSCF3036N6D*+TXV+HSK	D*97MC0603BNA*	23,200	17,200	14.0	11.5	815	9039490
	CSCF3036N6D*+TXV+HSK	D*97MC0804CNA*	23,200	17,200	14.0	11.5	800	9039495
	CSCF3036N6D*+TXV+HSK	D*96VC0804CNA*	23,200	17,200	14.0	11.5	800	9039457
	DV25PTCB14A*		23,000	17,000	14.0	12.0	850	8996416
	DV25PTCB14A*+HSK		23,000	17,000	14.0	12.0	850	9114254
	DV29PTCB14A*		23,400	17,300	14.0	12.0	795	8996417
	DV29PTCB14A*+HSK		23,400	17,300	14.0	12.0	795	9114255
DX13SN 0301A*	ACNF30XX16D*		27,600	20,800	13.0	11.0	890	6525161
	ARUF29B14A*		28,400	21,400	13.0	11.0	1,065	7988989
	ARUF30B14A*+TXV		27,000	20,400	13.0	11.0	900	6525167
	ARUF36C14B*+TXV		27,200	20,600	13.5	11.5	1,000	6525171
	ASPT36C14A*		28,000	21,200	14.0	12.0	1,010	6525175
	ASPT37B14A*		29,000	21,800	14.0	12.0	950	8245754
	ASPT39C14B*		28,000	21,200	14.0	12.0	1,000	201841182
	AVPTC36C14A*		28,000	21,200	14.0	12.0	1,015	6525186
	AWUF30XX16B*		27,600	20,800	13.0	11.0	1,000	6525189
	AWUF36XX16B*		27,800	21,000	13.0	11.0	1,000	6525191
	AWUF37XX16B*		28,000	21,200	13.0	11.0	1,000	6525193
	CA*F3030*6D*	D*96VE0303ANA*	28,000	21,400	13.5	11.5	975	10516643
	CA*F3030*6D*	D*96VE0403ANA*	28,400	21,600	13.0	11.5	975	10516649
	CA*F3030*6D*	D*80VC0603B*A*	28,200	22,000	13.5	11.5	1000	9948462
	CA*F3030*6D*	D*80VC0803B*A*	28,200	22,000	13.5	11.5	950	9948472
	CA*F3030*6D*	D*80VC0804C*A*	28,200	22,000	13.5	11.3	1050	9948482
	CA*F3030*6D*	D*96VC0804CNA*	28,400	21,400	14.0	11.5	1,000	7360314
	CA*F3030*6D*	D*96VE0402BNA*	28,400	21,400	13.5	11.5	1,000	7367174
	CA*F3030*6D*	D*96VC0803BNA*	28,400	21,400	14.0	11.5	1,030	7360313
	CA*F3030*6D*	D*97MC0803BNA*	28,400	21,400	14.0	11.5	1,030	7360316
	CA*F3030*6D*	D*80VC0604B*A*	28,200	21,200	13.5	11.3	1,050	6525331
	CA*F3030*6D*	D*97MC0804CNA*	28,400	21,400	14.0	11.5	1,000	7360317
	CA*F3030*6D*	D*96VE0603BNA*	28,400	21,400	13.5	11.5	1,000	7367182
	CA*F3030*6D*	D*97MC0603BNA*	28,400	21,400	14.0	11.5	1,000	7360315
	CA*F3030*6D*	D*96VE0803BNA*	28,400	21,400	13.5	11.5	1,000	7367190
	CA*F3030*6D*	D*96VE0302BNA*	28,000	21,200	13.5	11.5	1,000	7367167
	CA*F3030*6D*	D*96VC0403BNA*	28,400	21,400	14.0	11.5	1,000	7360311
	CA*F3030*6D*	D*96VC0603BNA*	28,400	21,400	14.0	11.5	1,000	7360312
	CA*F3030*6D*	DD80VC0603B*A*	28,000	21,200	13.5	11.3	1,050	6525370
	CA*F3030*6D*+EEP		28,400	21,400	13.0	11.0	1,050	6525195
	CA*F3030*6D*+TXV	D*96VE0303ANA*	28,000	21,400	13.5	11.5	975	10516644
	CA*F3030*6D*+TXV	D*96VE0403ANA*	28,200	21,400	13.5	11.5	975	10516650
	CA*F3030*6D*+TXV	D*96VE0603ANA*	28,000	21,400	13.5	11.3	975	10516642
	CA*F3030*6D*+TXV	D*80VC0603B*A*	28,200	22,000	14.0	11.5	1000	9948463
	CA*F3030*6D*+TXV	D*80VC0803B*A*	28,200	22,000	14.0	11.5	950	9948473
	CA*F3030*6D*+TXV	D*97MC0803BNA*	28,400	21,400	14.0	11.5	1,030	7360323
	CA*F3030*6D*+TXV	D*96VE0603BNA*	28,400	21,400	13.5	11.5	1,000	7367183
	CA*F3030*6D*+TXV	D*96VE0302BNA*	28,400	21,400	14.0	11.5	1,000	7367168

See Notes on Page 45.

Outdoor Unit	Indoor Units		Cooling Ratings				CFM	AHRI #
		10.8 600	6524085	ACNF24	XX16D*	17,		
DX13SN 0301A* (cont.)	CA*F3030*6D*+TXV	D*96VE0803BNA*	28,400	21,400	13.5	11.5	1,000	7367191
	CA*F3030*6D*+TXV	D*97MC0603BNA*	28,400	21,400	14.0	11.5	1,000	7360322
	CA*F3030*6D*+TXV	D*96VC0403BNA*	28,400	21,400	14.0	11.5	1,000	7360318
	CA*F3030*6D*+TXV	D*96VC0603BNA*	28,400	21,400	14.0	11.5	1,000	7360319
	CA*F3030*6D*+TXV	D*96VE0402BNA*	28,400	21,400	14.0	11.5	1,000	7367175
	CA*F3030*6D*+TXV	D*97MC0804CNA*	28,400	21,400	14.0	11.5	1,000	7360324
	CA*F3030*6D*+TXV	D*96VC0803BNA*	28,400	21,400	14.0	11.5	1,030	7360320
	CA*F3030*6D*+TXV	D*96VC0804CNA*	28,400	21,400	14.0	11.5	1,000	7360321
	CA*F3131*6D*	D*96VE0303ANA*	28,200	21,400	13.5	11.5	975	10516645
	CA*F3131*6D*	D*96VE0403ANA*	28,400	21,600	13.5	11.5	975	10516651
	CA*F3131*6D*	D*96VE0803BNA*	28,600	21,600	13.5	11.5	1,000	7367192
	CA*F3131*6D*	D*96VE0603BNA*	28,600	21,600	13.5	11.5	1,000	7367184
	CA*F3131*6D*	DD80VC0603B*A*	28,000	21,200	13.5	11.5	1,050	6525371
	CA*F3131*6D*	D*96VE0402BNA*	28,600	21,600	14.0	11.5	1,000	7367176
	CA*F3131*6D*	D*80VC0604B*A*	28,200	21,200	13.5	11.5	1,050	6525332
	CA*F3131*6D*	D*96VE0302BNA*	28,600	21,600	14.0	11.5	1,000	7367169
	CA*F3131*6D*+EEP		28,600	21,600	13.0	11.0	1,050	6525197
	CA*F3131*6D*+MBVC1200**-1A*		28,400	21,400	14.0	11.5	950	6525199
	CA*F3131*6D*+TXV	D*96VE0303ANA*	28,000	21,400	13.5	11.5	975	10516646
	CA*F3131*6D*+TXV	D*96VE0403ANA*	28,400	21,600	13.5	11.5	975	10516652
	CA*F3131*6D*+TXV	D*96VE0603ANA*	28,200	21,400	13.5	11.3	975	10516657
	CA*F3131*6D*+TXV	D*96VE0803BNA*	28,600	21,600	13.5	11.5	1,000	7367193
	CA*F3131*6D*+TXV	D*96VE0302BNA*	28,600	21,600	14.0	11.5	1,000	7367170
	CA*F3131*6D*+TXV	D*96VE0603BNA*	28,600	21,600	13.5	11.5	1,000	7367185
	CA*F3131*6D*+TXV	D*96VE0402BNA*	28,600	21,600	14.0	11.5	1,000	7367177
	CA*F3137*6A*	D*96VE0403ANA*	28,600	21,800	13.5	11.5	975	10516653
	CA*F3137*6A*	D*80VC0603B*A*	28,200	22,000	13.5	11.5	1000	9948464
	CA*F3137*6A*	D*80VC0803B*A*	28,200	22,000	13.5	11.5	950	9948474
	CA*F3137*6A*	D*96VE0803BNA*	28,400	21,400	13.5	11.5	1,010	7489746
	CA*F3137*6A*	D*96VC0803BNA*	28,400	21,400	14.0	11.5	1,025	7489750
	CA*F3137*6A*	D*96VC0603BNA*	28,400	21,400	14.0	11.5	985	7489749
	CA*F3137*6A*	D*80VC0604B*A*	28,400	21,400	14.0	11.5	990	7489747
	CA*F3137*6A*	D*97MC0803BNA*	28,400	21,400	14.0	11.5	1,025	7489752
	CA*F3137*6A*	D*96VC0403BNA*	28,400	21,400	14.0	11.5	985	7489748
	CA*F3137*6A*	D*96VE0603BNA*	28,400	21,400	14.0	11.5	1,020	7489745
	CA*F3137*6A*	D*96VE0402BNA*	28,000	21,200	13.5	11.5	935	7489744
	CA*F3137*6A*	D*97MC0603BNA*	28,400	21,400	14.0	11.5	985	7489751
	CA*F3137*6A*+EEP		28,400	21,400	13.0	11.0	1,000	7489731
	CA*F3137*6A*+EEP+TXV		28,400	21,400	13.5	11.0	1,000	7489732
	CA*F3137*6A*+MBVC1200**-1A*		28,400	21,400	14.0	11.5	1,025	7489733
	CA*F3137*6A*+MBVC1200**-1A*+TXV		28,400	21,400	14.0	11.5	1,025	7489734
	CA*F3137*6A*+TXV	D*96VE0403ANA*	28,600	21,800	14.0	11.5	975	10516654
	CA*F3137*6A*+TXV	D*96VE0603ANA*	28,400	21,600	13.5	11.3	975	10516658
	CA*F3137*6A*+TXV	D*80VC0603B*A*	28,200	22,000	14.0	11.5	1000	9948465
	CA*F3137*6A*+TXV	D*80VC0803B*A*	28,200	22,000	14.0	11.5	950	9948475
	CA*F3137*6A*+TXV	D*80VC0604B*A*	28,400	21,400	14.0	11.5	990	7489738
	CA*F3137*6A*+TXV	D*97MC0803BNA*	28,400	21,400	14.0	11.5	1,025	7489743
	CA*F3137*6A*+TXV	D*96VE0603BNA*	28,400	21,400	14.0	11.5	1,020	7489736
	CA*F3137*6A*+TXV	D*96VE0803BNA*	28,400	21,400	13.5	11.5	1,010	7489737

See Notes on Page 45.

Outdoor Unit	Indoor Units		Cooling Ratings				CFM	AHRI #
		10.8 600	6524085	ACNF24	XX16D*	17,		
DX13SN 0301A* (cont.)	CA*F3137*6A*+TXV	D*96VC0403BNA*	28,400	21,400	14.0	11.5	985	7489739
	CA*F3137*6A*+TXV	D*96VC0603BNA*	28,400	21,400	14.0	11.5	985	7489740
	CA*F3137*6A*+TXV	D*96VE0402BNA*	28,000	21,200	14.0	11.5	935	7489735
	CA*F3137*6A*+TXV	D*97MC0603BNA*	28,400	21,400	14.0	11.5	985	7489742
	CA*F3137*6A*+TXV	D*96VC0803BNA*	28,400	21,400	14.0	11.5	1,025	7489741
	CA*F3636*6D*+EEP		28,400	21,400	13.0	11.0	1,000	6525201
	CA*F3636*6D*+EEP+TXV		28,400	21,400	13.0	11.0	1,000	6525203
	CA*F3642*6D*+EEP		28,400	21,400	13.0	11.0	1,000	6525205
	CA*F3642*6D*+EEP+TXV		28,400	21,400	13.0	11.0	1,000	6525207
	CA*F3743*6D*	D*96VC0804CNA*	28,600	21,600	14.0	11.5	1,000	7360325
	CA*F3743*6D*	D*97MC0804CNA*	28,600	21,600	14.0	11.5	1,000	7360326
	CA*F3743*6D*+EEP		28,400	21,400	13.5	11.0	1,000	6525209
	CA*F3743*6D*+EEP+TXV		28,400	21,400	13.5	11.0	1,000	6525211
	CA*F3743*6D*+TXV	D*96VC0804CNA*	28,200	21,200	14.0	11.5	1,000	7360327
	CA*F3743*6D*+TXV	D*96VE0803BNA*	28,600	21,600	14.0	11.5	1,000	7367194
	CA*F3743*6D*+TXV	D*96VE0603BNA*	28,800	21,800	14.0	11.5	1,000	7367186
	CA*F3743*6D*+TXV	D*97MC0804CNA*	28,200	21,200	14.0	11.5	1,000	7360328
	CA*F3743*6D*+TXV	D*96VE0402BNA*	28,600	21,600	14.0	11.5	1,000	7367179
	CAPT3131*4A*	D*80VC0603B*A*	28,200	22,000	13.5	11.5	1000	9948466
	CAPT3131*4A*	D*80VC0803B*A*	28,200	22,000	13.5	11.5	950	9948476
	CAPT3131*4A*	D*97MC0603BNA*	28,400	21,400	14.0	11.5	1,000	7360333
	CAPT3131*4A*	D*96VC0603BNA*	28,400	21,400	14.0	11.5	1,000	7360330
	CAPT3131*4A*	D*97MC0803BNA*	28,000	21,200	13.5	11.5	1,030	7360334
	CAPT3131*4A*	D*96VC0803BNA*	28,000	21,200	13.5	11.5	1,030	7360331
	CAPT3131*4A*	D*96VC0403BNA*	28,000	21,200	13.5	11.5	1,000	7360329
	CAPT3131*4A*	D*97MC0804CNA*	28,000	21,200	13.5	11.5	1,000	7360335
	CAPT3131*4A*	D*96VC0804CNA*	28,000	21,200	13.5	11.5	1,000	7360332
	CAPT3743*4A*	D*80VC0603B*A*	28,200	22,000	14.0	11.5	1000	9948467
	CAPT3743*4A*	D*80VC0803B*A*	28,200	22,000	14.0	11.5	950	9948477
	CAPT3743*4A*	D*80VC0804C*A*	28,200	22,000	14.0	12.0	1050	9948483
	CAPT3743*4A*	D*80VC0805D*A*	28,200	22,000	14.0	12.0	1000	9948484
	CAPT3743*4A*	D*97MC0603BNA*	28,200	21,200	13.5	11.5	1,000	7360340
	CAPT3743*4A*	D*96VC0403BNA*	28,200	21,200	14.0	11.5	1,000	7360336
	CAPT3743*4A*	DD80VC1005C*A*	28,000	21,200	14.0	12.0	1,010	6525374
	CAPT3743*4A*	D*96VC0804CNA*	28,200	21,200	14.0	11.5	1,000	7360339
	CAPT3743*4A*	D*96VC0803BNA*	28,200	21,200	14.0	11.5	1,030	7360338
	CAPT3743*4A*	D*96VE0302BNA*	28,400	21,400	14.0	11.5	1,000	7367171
	CAPT3743*4A*	D*80VC0604B*A*	28,200	21,200	14.0	12.0	1,000	6525333
	CAPT3743*4A*	D*80VC0805C*A*	28,200	21,200	14.0	12.0	980	6525334
	CAPT3743*4A*	D*80HE0603B*A*	28,200	21,200	13.5	11.5	1,050	6525330
	CAPT3743*4A*	D*97MC0804CNA*	28,200	21,200	14.0	11.5	1,000	7360342
	CAPT3743*4A*	D*96VE0603BNA*	28,600	21,600	13.5	11.5	1,000	7367187
	CAPT3743*4A*	D*96VE0803BNA*	28,600	21,600	13.5	11.5	1,000	7367195
	CAPT3743*4A*	D*97MC0803BNA*	28,200	21,200	14.0	11.5	1,030	7360341
	CAPT3743*4A*	DD80VC0603B*A*	28,000	21,200	13.5	11.5	1,000	6525372
	CAPT3743*4A*	DD80VC0805C*A*	28,000	21,200	14.0	12.0	990	6525373
	CAPT3743*4A*	D*96VE0402BNA*	28,400	21,400	14.0	11.5	1,000	7367178
	CAPT3743*4A*	D*96VC0603BNA*	28,200	21,200	13.5	11.5	1,000	7360337

See Notes on Page 45.

Outdoor Unit	Indoor Units		Cooling Ratings				CFM	AHRI #
		10.8 600	6524085	ACNF24	XX16D*	17,		
DX13SN 0301A* (cont.)	CAPT3743*4A*	D*80VC1005C*A*	28,200	21,200	14.0	12.0	1,000	6525335
	CAPT3743*4A*+EEP		28,200	21,200	13.0	11.0	1,000	6525213
	CAPT3743*4A*+MBVC1200**-1A*		28,000	21,200	14.0	11.5	900	6525215
	CAPT3743*4A*+MBVC1600**-1A*		28,200	21,200	14.0	11.5	1,000	6525217
	CHPF2430B6C*	D*96VE0303ANA*	28,400	21,600	13.5	11.5	975	10516647
	CHPF2430B6C*	D*96VE0403ANA*	28,400	21,600	13.5	11.5	975	10516655
	CHPF2430B6C*	D*80VC0603B*A*	28,400	22,200	13.5	11.3	1000	9948468
	CHPF2430B6C*	D*80VC0803B*A*	28,400	22,200	13.5	11.3	950	9948478
	CHPF2430B6C*	D*96VE0302BNA*	28,400	21,400	14.0	11.5	1,000	7367172
	CHPF2430B6C*	D*97MC0603BNA*	28,400	21,400	14.0	11.5	1,000	7360346
	CHPF2430B6C*	D*96VC0603BNA*	28,400	21,400	14.0	11.5	1,000	7360344
	CHPF2430B6C*	D*96VC0803BNA*	28,400	21,400	14.0	11.5	1,030	7360345
	CHPF2430B6C*	D*96VE0402BNA*	28,400	21,400	14.0	11.5	1,000	7367180
	CHPF2430B6C*	D*97MC0803BNA*	28,400	21,400	14.0	11.5	1,030	7360347
	CHPF2430B6C*	D*96VC0403BNA*	28,400	21,400	14.0	11.5	1,000	7360343
	CHPF2430B6C*+EEP		28,400	21,400	13.0	11.0	1,050	6525219
	CHPF2430B6C*+MBVC1200**-1A*		28,400	21,400	14.0	11.5	1,050	6525221
	CHPF2430B6C*+TXV	D*96VE0303ANA*	28,400	21,600	14.0	11.5	975	10516648
	CHPF2430B6C*+TXV	D*96VE0403ANA*	28,400	21,600	13.5	11.5	975	10516656
	CHPF2430B6C*+TXV	D*80VC0603B*A*	28,400	22,200	14.0	11.5	1000	9948469
	CHPF2430B6C*+TXV	D*80VC0803B*A*	28,400	22,200	14.0	11.5	950	9948479
	CHPF2430B6C*+TXV	D*97MC0803BNA*	28,400	21,400	14.0	11.5	1,030	7360352
	CHPF2430B6C*+TXV	D*97MC0603BNA*	28,400	21,400	14.0	11.5	1,000	7360351
	CHPF2430B6C*+TXV	D*96VC0403BNA*	28,400	21,400	14.0	11.5	1,000	7360348
	CHPF2430B6C*+TXV	D*96VC0803BNA*	28,400	21,400	14.0	11.5	1,030	7360350
	CHPF2430B6C*+TXV	D*96VE0302BNA*	28,400	21,400	14.0	11.5	1,000	7367173
	CHPF2430B6C*+TXV	D*96VE0402BNA*	28,400	21,400	14.0	11.5	1,000	7367181
	CHPF2430B6C*+TXV	D*96VC0603BNA*	28,400	21,400	14.0	11.5	1,000	7360349
	CHPF3636B6C*	D*96VE0803BNA*	28,400	21,400	13.5	11.5	1,000	7367196
	CHPF3636B6C*	D*96VE0603BNA*	28,400	21,400	13.5	11.5	1,000	7367188
	CHPF3636B6C*+TXV	D*96VE0603ANA*	28,400	21,600	13.5	11.3	975	10516659
	CHPF3636B6C*+TXV	D*96VE0803BNA*	28,400	21,400	14.0	11.5	1,000	7367197
	CHPF3636B6C*+TXV	D*96VE0603BNA*	28,400	21,400	14.0	11.5	1,000	7367189
	CHPF3642C6C*	D*97MC0804CNA*	28,400	21,400	14.0	11.5	1,000	7360354
	CHPF3642C6C*	D*96VC0804CNA*	28,400	21,400	14.0	11.5	1,000	7360353
	CHPF3642C6C*+TXV	D*97MC0804CNA*	28,400	21,400	14.0	11.5	1,000	7360356
	CHPF3642C6C*+TXV	D*96VC0804CNA*	28,400	21,400	14.0	11.5	1,000	7360355
	CSCF3036N6D*	D*80VC0603B*A*	28,000	22,000	13.5	11.2	1000	9948470
	CSCF3036N6D*	D*80VC0803B*A*	28,000	22,000	13.5	11.2	950	9948480
	CSCF3036N6D*	D*97MC0603BNA*	28,400	21,400	14.0	11.3	1,000	7360361
	CSCF3036N6D*	D*96VC0403BNA*	28,400	21,400	14.0	11.5	1,000	7360357
	CSCF3036N6D*	D*96VC0603BNA*	28,400	21,400	14.0	11.3	1,000	7360358
	CSCF3036N6D*	D*96VC0804CNA*	28,200	21,200	14.0	11.5	1,000	7360360
	CSCF3036N6D*	D*97MC0804CNA*	28,200	21,200	14.0	11.5	1,000	7360363
	CSCF3036N6D*	D*97MC0803BNA*	28,400	21,400	14.0	11.5	1,030	7360362
	CSCF3036N6D*	D*96VC0803BNA*	28,400	21,400	14.0	11.5	1,030	7360359
	CSCF3036N6D*+EEP		28,400	21,400	13.0	11.0	1,000	6525223
	CSCF3036N6D*+TXV	D*80VC0603B*A*	28,000	22,000	13.5	11.2	1000	9948471

See Notes on Page 45.

Outdoor Unit	Indoor Units		Cooling Ratings				CFM	AHRI #
		10.8 600	6524085	ACNF24	XX16D*	17,		
DX13SN 0301A* (cont.)	CSCF3036N6D*+TXV	D*80VC0803B*A*	28,000	22,000	13.5	11.2	950	9948481
	CSCF3036N6D*+TXV	D*97MC0603BNA*	28,400	21,400	14.0	11.3	1,000	7360368
	CSCF3036N6D*+TXV	D*97MC0803BNA*	28,400	21,400	14.0	11.5	1,030	7360369
	CSCF3036N6D*+TXV	D*97MC0804CNA*	28,200	21,200	14.0	11.5	1,000	7360370
	CSCF3036N6D*+TXV	D*96VC0603BNA*	28,400	21,400	14.0	11.3	1,000	7360365
	CSCF3036N6D*+TXV	D*96VC0803BNA*	28,400	21,400	14.0	11.5	1,030	7360366
	CSCF3036N6D*+TXV	D*96VC0804CNA*	28,200	21,200	14.0	11.5	1,000	7360367
	CSCF3036N6D*+TXV	D*96VC0403BNA*	28,400	21,400	14.0	11.5	1,000	7360364
	DV25PTCB14A*		28,000	21,200	13.5	11.5	875	8996418
	DV29PTCB14A*		28,400	21,400	14.0	12.0	925	8996419
	DV31PTCC14A*		29,000	21,800	14.0	12.0	930	8996420
	DV36PTCC14A*		28,000	21,200	14.0	12.0	1,015	6525185
DX13SN 0361A*	ARUF36C14B*+TXV		34,000	26,400	13.0	11.0	1,165	6525381
	ARUF37C14A*		34,000	26,400	13.0	11.0	1,050	7988990
	ARUF42C14A*+TXV		34,200	26,600	13.0	11.0	1,150	6525385
	ASPT36C14A*		34,000	26,400	13.8	11.8	1,210	6525389
	ASPT37C14A*		34,200	26,600	14.0	12.0	1,120	8245755
	ASPT39C14B*		34,400	26,800	13.5	11.5	1,220	201841183
	AVPTC36C14A*		34,000	26,400	13.8	11.8	1,215	6525400
	AVPTC42D14A*		34,600	27,000	14.0	12.0	1,225	6525404
	AVPTC48C14A*		34,000	26,400	14.0	12.0	1,100	7080463
	AWUF36XX16B*		33,400	26,000	13.0	11.0	1,150	6525407
	AWUF37XX16B*		33,600	26,200	13.0	11.0	1,150	6525409
	CA*F3137*6A*	D*80VC0603B*A*	34,000	27,200	14.0	11.5	1200	9948485
	CA*F3137*6A*	D*80VC0803B*A*	34,000	27,200	14.0	11.5	1150	9948487
	CA*F3137*6A*	D*96VC0403BNA*	34,000	26,400	13.5	11.0	1,050	7489770
	CA*F3137*6A*	D*80VC0604B*A*	34,000	26,400	14.0	11.5	1,095	7489769
	CA*F3137*6A*	D*96VE0803BNA*	34,000	26,400	13.5	11.0	1,090	7489768
	CA*F3137*6A*	D*97MC0603BNA*	34,000	26,400	13.5	11.0	1,055	7489773
	CA*F3137*6A*	D*96VE0603BNA*	34,000	26,400	13.5	11.0	1,090	7489767
	CA*F3137*6A*	D*96VC0803BNA*	34,000	26,400	13.5	11.0	1,100	7489772
	CA*F3137*6A*	D*96VC0603BNA*	34,000	26,400	13.5	11.0	1,055	7489771
	CA*F3137*6A*	D*97MC0803BNA*	34,000	26,400	13.5	11.0	1,100	7489774
	CA*F3137*6A*	D*80HE0603B*A*	34,000	26,400	14.0	11.5	1,100	7489766
	CA*F3137*6A*+EEP		34,000	26,400	13.0	11.0	1,200	7489753
	CA*F3137*6A*+EEP+TXV		34,000	26,400	13.5	11.0	1,200	7489754
	CA*F3137*6A*+MBVC1200**-1A*		34,000	26,400	14.0	11.5	1,050	7489755
	CA*F3137*6A*+MBVC1200**-1A*+TXV		34,000	26,400	14.0	11.5	1,050	7489756
	CA*F3137*6A*+TXV	D*80VC0603B*A*	34,000	27,200	14.0	11.5	1200	9948486
	CA*F3137*6A*+TXV	D*80VC0803B*A*	34,000	27,200	14.0	11.5	1150	9948488
	CA*F3137*6A*+TXV	D*97MC0803BNA*	34,000	26,400	14.0	11.5	1,100	7489765
	CA*F3137*6A*+TXV	D*96VC0603BNA*	34,000	26,400	14.0	11.5	1,055	7489762
	CA*F3137*6A*+TXV	D*97MC0603BNA*	34,000	26,400	14.0	11.5	1,055	7489764
	CA*F3137*6A*+TXV	D*80HE0603B*A*	34,000	26,400	14.0	11.5	1,100	7489757
	CA*F3137*6A*+TXV	D*96VC0403BNA*	34,000	26,400	14.0	11.5	1,050	7489761
	CA*F3137*6A*+TXV	D*80VC0604B*A*	34,000	26,400	14.0	11.5	1,095	7489760
	CA*F3137*6A*+TXV	D*96VC0803BNA*	34,000	26,400	14.0	11.5	1,100	7489763
	CA*F3137*6A*+TXV	D*96VE0603BNA*	34,000	26,400	13.5	11.0	1,090	7489758
	CA*F3137*6A*+TXV	D*96VE0803BNA*	34,000	26,400	13.5	11.0	1,090	7489759

See Notes on Page 45.

Outdoor Unit	Indoor Units		Cooling Ratings				CFM	AHRI #
		10.8 600	6524085	ACNF24	XX16D*	17,		
DX13SN 0361A* (cont.)	CA*F3636*6D*+EEP		33,600	26,200	13.0	11.0	1,200	6525411
	CA*F3642*6D*+EEP		33,600	26,200	13.0	11.0	1,200	6525413
	CA*F3642*6D*+MBVC1600**-1A*		34,000	26,400	14.0	11.5	1,200	6525415
	CA*F3743*6D*	D*80VC1005C*A*	34,000	27,200	13.5	11.3	1150	9948491
	CA*F3743*6D*	D*97MC0804CNA*	34,000	26,400	13.0	11.0	1,115	7360374
	CA*F3743*6D*	D*96VC1205DNA*	34,000	26,400	13.5	11.3	1,150	7360373
	CA*F3743*6D*	D*96VC1005CNA*	34,000	26,400	13.5	11.3	1,175	7360372
	CA*F3743*6D*	D*96VC0804CNA*	34,000	26,400	13.0	11.0	1,115	7360371
	CA*F3743*6D*	D*97MC1005CNA*	34,000	26,400	13.5	11.3	1,175	7360375
	CA*F3743*6D*	D*96VE1004CNA*	33,600	26,200	13.5	11.5	1,100	7367202
	CA*F3743*6D*	D*97MC1205DNA*	34,000	26,400	13.5	11.3	1,150	7360376
	CA*F3743*6D*+EEP		34,200	26,600	13.0	11.0	1,200	6525417
	CA*F3743*6D*+EEP+TXV		34,200	26,600	13.5	11.0	1,200	6525419
	CA*F3743*6D*+MBVC1600**-1A*		34,000	26,400	14.0	11.5	1,210	6525421
	CA*F3743*6D*+TXV	D*80VC1005C*A*	34,000	27,200	13.5	11.5	1150	9948492
	CA*F3743*6D*+TXV	D*97MC0804CNA*	34,000	26,400	13.5	11.3	1,115	7360380
	CA*F3743*6D*+TXV	D*96VE1004CNA*	33,600	26,200	14.0	11.5	1,100	7367203
	CA*F3743*6D*+TXV	D*96VE0603BNA*	33,600	26,200	13.5	11.0	1,175	7367198
	CA*F3743*6D*+TXV	D*97MC1205DNA*	34,000	26,400	13.5	11.3	1,150	7360382
	CA*F3743*6D*+TXV	D*96VC1005CNA*	34,000	26,400	13.5	11.3	1,175	7360378
	CA*F3743*6D*+TXV	D*96VE0803BNA*	33,400	26,000	13.5	11.0	1,075	7367200
	CA*F3743*6D*+TXV	D*96VC1205DNA*	34,000	26,400	13.5	11.3	1,150	7360379
	CA*F3743*6D*+TXV	D*96VC0804CNA*	34,000	26,400	13.5	11.3	1,115	7360377
	CA*F3743*6D*+TXV	D*97MC1005CNA*	34,000	26,400	13.5	11.3	1,175	7360381
	CAPT3743*4A*	D*80VC0804C*A*	34,000	27,200	13.5	11.5	1250	9948489
	CAPT3743*4A*	D*80VC0805D*A*	34,000	27,200	13.5	11.5	1200	9948490
	CAPT3743*4A*	DD80VC0603B*A*	34,000	26,400	13.5	11.5	1,165	6525682
	CAPT3743*4A*	D*80VC0805C*A*	34,000	26,400	13.5	11.5	1,190	6525623
	CAPT3743*4A*	D*96VE1004CNA*	33,600	26,200	13.5	11.3	1,100	7367204
	CAPT3743*4A*	D*80VC1005C*A*	34,000	26,400	13.5	11.5	1,210	6525624
	CAPT3743*4A*	D*96VC1005CNA*	34,000	26,400	13.0	11.0	1,175	7360384
	CAPT3743*4A*	DD80VC1005C*A*	34,000	26,400	13.5	11.5	1,235	6525684
	CAPT3743*4A*	D*80HE1005C*A*	34,000	26,400	13.5	11.5	1,230	6525621
	CAPT3743*4A*	D*80HE0603B*A*	34,000	26,400	13.0	11.0	1,150	6525619
	CAPT3743*4A*	D*80HE0805C*A*	34,000	26,400	13.5	11.5	1,210	6525620
	CAPT3743*4A*	D*97MC1005CNA*	34,000	26,400	13.0	11.0	1,175	7360387
	CAPT3743*4A*	D*96VC1205DNA*	34,000	26,400	13.5	11.3	1,150	7360385
	CAPT3743*4A*	D*96VC0804CNA*	34,000	26,400	13.0	11.0	1,115	7360383
	CAPT3743*4A*	DD80VC0805C*A*	34,000	26,400	13.5	11.5	1,190	6525683
	CAPT3743*4A*	D*80VC0604B*A*	34,000	26,400	13.5	11.5	1,220	6525622
	CAPT3743*4A*	D*97MC0804CNA*	34,000	26,400	13.0	11.0	1,115	7360386
	CAPT3743*4A*	D*97MC1205DNA*	34,000	26,400	13.5	11.3	1,150	7360388
	CAPT3743*4A*+EEP		34,000	26,400	13.0	11.0	1,200	6525423
	CAPT3743*4A*+MBVC1200**-1A*		34,000	26,400	13.0	11.5	1,200	6525425
	CAPT3743*4A*+MBVC1600**-1A*		34,000	26,400	14.0	11.5	1,205	6525427
	CAPT3743*4A*+MBVC2000**-1A*		34,000	26,400	14.0	11.5	1,205	6525429
	CHPF3636B6C*+EEP		33,000	26,400	13.0	11.0	1,000	6525431
	CHPF3642C6C*	D*80VC1005C*A*	34,000	27,200	13.5	11.3	1150	9948493
	CHPF3642C6C*	D*96VC0804CNA*	33,800	26,400	13.0	11.0	1,115	7360389

See Notes on Page 45.

Outdoor Unit	Indoor Units		Cooling Ratings				CFM	AHRI #
		10.8 600	6524085	ACNF24	XX16D*	17,		
DX13SN 0361A* (cont.)	CHPF3642C6C*	D*97MC0804CNA*	33,800	26,400	13.0	11.0	1,115	7360391
	CHPF3642C6C*	D*97MC1005CNA*	34,000	26,400	13.5	11.3	1,175	7360392
	CHPF3642C6C*	D*96VC1005CNA*	34,000	26,400	13.5	11.3	1,175	7360390
	CHPF3642C6C*+EEP		33,000	26,400	13.0	11.0	1,075	6525433
	CHPF3642C6C*+MBVC1600**-1A*		34,000	26,400	14.0	11.5	1,210	6525435
	CHPF3642C6C*+TXV	D*80VC1005C*A*	34,000	27,200	13.5	11.5	1150	9948494
	CHPF3642C6C*+TXV	D*96VC1005CNA*	34,000	26,400	13.5	11.3	1,175	7360394
	CHPF3642C6C*+TXV	D*97MC1005CNA*	34,000	26,400	13.5	11.3	1,175	7360396
	CHPF3642C6C*+TXV	D*96VC0804CNA*	33,800	26,400	13.5	11.3	1,115	7360393
	CHPF3642C6C*+TXV	D*97MC0804CNA*	33,800	26,400	13.5	11.3	1,115	7360395
	CHPF3642D6C*	D*96VC1205DNA*	34,000	26,400	13.5	11.3	1,150	7360397
	CHPF3642D6C*	D*97MC1205DNA*	34,000	26,400	13.5	11.3	1,150	7360398
	CHPF3642D6C*+EEP		34,000	26,400	13.0	11.0	1,200	6525437
	CHPF3642D6C*+TXV	D*97MC1205DNA*	34,000	26,400	13.5	11.3	1,150	7360400
	CHPF3642D6C*+TXV	D*96VC1205DNA*	34,000	26,400	13.5	11.3	1,150	7360399
	CHPF3743C6B*	D*96VE1004CNA*	33,600	26,200	13.5	11.3	1,100	7367205
	CHPF3743C6B*+TXV	D*96VE0603BNA*	33,600	26,200	13.5	11.0	1,175	7367199
	CHPF3743C6B*+TXV	D*96VE1004CNA*	33,600	26,200	14.0	11.5	1,100	7367206
	CHPF3743C6B*+TXV	D*96VE0803BNA*	33,400	26,000	13.5	11.0	1,075	7367201
	CSCF3036N6D*+EEP		34,000	26,400	13.0	11.0	1,200	7424601
	CSCF3642N6D*	D*80VC1005C*A*	34,000	27,200	13.5	11.3	1150	9948495
	CSCF3642N6D*	D*97MC1205DNA*	33,600	26,200	13.5	11.3	1,150	7360406
	CSCF3642N6D*	D*96VC1005CNA*	33,800	26,400	13.5	11.3	1,175	7360402
	CSCF3642N6D*	D*96VC1205DNA*	33,600	26,200	13.5	11.3	1,150	7360403
	CSCF3642N6D*	D*97MC0804CNA*	33,600	26,200	13.0	11.0	1,115	7360404
	CSCF3642N6D*	D*97MC1005CNA*	33,800	26,400	13.5	11.3	1,175	7360405
	CSCF3642N6D*	D*96VC0804CNA*	33,600	26,200	13.0	11.0	1,115	7360401
	CSCF3642N6D*+EEP		34,600	27,000	13.0	11.0	1,200	7424603
	CSCF3642N6D*+TXV	D*80VC1005C*A*	34,000	27,200	13.5	11.5	1150	9948496
	CSCF3642N6D*+TXV	D*96VC1005CNA*	33,800	26,400	13.5	11.3	1,175	7360408
	CSCF3642N6D*+TXV	D*97MC1005CNA*	33,800	26,400	13.5	11.3	1,175	7360411
	CSCF3642N6D*+TXV	D*97MC1205DNA*	33,600	26,200	13.5	11.3	1,150	7360412
	CSCF3642N6D*+TXV	D*96VC1205DNA*	33,600	26,200	13.5	11.3	1,150	7360409
	CSCF3642N6D*+TXV	D*97MC0804CNA*	33,600	26,200	13.0	11.0	1,115	7360410
	CSCF3642N6D*+TXV	D*96VC0804CNA*	33,600	26,200	13.0	11.0	1,115	7360407
	DV36PTCC14A*		34,000	26,400	13.8	11.8	1,215	6525399
	DV37PTCB14A*		34,600	27,000	13.5	11.5	1,080	8996421
	DV37PTCC14A*		35,000	27,200	14.0	12.0	1,130	8996422
	DV37PTCD14A*		35,400	27,600	14.0	12.0	1,145	8996423
	DV42PTCD14A*		34,600	27,000	14.0	12.0	1,225	6525403
DX13SN 0421A*	ARUF42C14A*+TXV		39,500	30,200	13.0	11.0	1,280	6525691
	ARUF43C14A*		40,500	31,000	13.0	11.0	1,345	7988991
	ARUF43D14A*		40,500	31,000	13.0	11.0	1,270	8171751
	ASPT47D14A*		40,000	30,600	14.0	12.0	1,200	8245756
	ASPT49D14A*		40,500	31,000	14.0	12.0	1,290	8245757
	AVPTC42D14A*		40,500	31,000	14.0	12.0	1,495	6525710
	AVPTC48C14A*		39,500	30,200	13.5	11.5	1,300	7080475
	CA*F3642*6D*	D*80HE0805C*A*	40,000	30,600	13.0	11.3	1,350	6712153
	CA*F3642*6D*+EEP		40,000	30,600	13.0	11.0	1,400	6525713

See Notes on Page 45.

Outdoor Unit	Indoor Units		Cooling Ratings				CFM	AHRI #
		10.8 600	6524085	ACNF24	XX16D*	17,		
DX13SN 0421A* (cont.)	CA*F3642*6D*+EEP+TXV		40,000	30,600	13.0	11.0	1,400	6525715
	CA*F3743*6D*	D*80VC1005C*A*	40,500	32,000	14.0	11.5	1300	9948497
	CA*F3743*6D*	D*97MC0804CNA*	40,500	31,000	14.0	11.5	1,300	7360416
	CA*F3743*6D*	D*97MC1005CNA*	40,500	31,000	14.0	11.5	1,300	7360417
	CA*F3743*6D*	D*97MC1205DNA*	40,000	30,600	14.0	11.5	1,250	7360418
	CA*F3743*6D*	D*96VC1005CNA*	40,500	31,000	14.0	11.5	1,300	7360414
	CA*F3743*6D*	D*96VC1205DNA*	40,000	30,600	14.0	11.5	1,250	7360415
	CA*F3743*6D*	D*96VC0804CNA*	40,500	31,000	14.0	11.5	1,300	7360413
	CA*F3743*6D*	D*80HE0805C*A*	40,000	30,600	13.0	11.3	1,350	6712154
	CA*F3743*6D*+EEP		40,000	30,600	13.0	11.0	1,400	6525717
	CA*F3743*6D*+TXV	D*80VC1005C*A*	40,500	32,000	14.0	11.5	1300	9948498
	CA*F3743*6D*+TXV	D*97MC0804CNA*	40,500	31,000	14.0	11.5	1,300	7360422
	CA*F3743*6D*+TXV	D*96VC1205DNA*	40,000	30,600	14.0	11.5	1,250	7360421
	CA*F3743*6D*+TXV	D*96VC0804CNA*	40,500	31,000	14.0	11.5	1,300	7360419
	CA*F3743*6D*+TXV	D*97MC1205DNA*	40,000	30,600	14.0	11.5	1,250	7360424
	CA*F3743*6D*+TXV	D*96VC1005CNA*	40,500	31,000	14.0	11.5	1,300	7360420
	CA*F3743*6D*+TXV	D*97MC1005CNA*	40,500	31,000	14.0	11.5	1,300	7360423
	CA*F4860*6D*	D*80VC1005C*A*	40,500	32,000	14.0	11.5	1300	9948499
	CA*F4860*6D*	D*96VC1005CNA*	41,000	31,400	14.0	11.5	1,300	7360426
	CA*F4860*6D*	D*80HE0805C*A*	41,000	31,400	13.5	11.5	1,510	6712155
	CA*F4860*6D*	D*97MC1205DNA*	40,500	31,000	14.0	11.5	1,250	7360430
	CA*F4860*6D*	D*96VE1004CNA*	39,500	30,200	14.0	11.5	1,275	7367207
	CA*F4860*6D*	D*96VC1205DNA*	40,500	31,000	14.0	11.5	1,250	7360427
	CA*F4860*6D*	D*96VE1205DNA*	40,000	30,600	13.5	11.3	1,400	7367212
	CA*F4860*6D*	D*96VC0804CNA*	41,000	31,400	14.0	11.5	1,300	7360425
	CA*F4860*6D*	D*97MC1005CNA*	41,000	31,400	14.0	11.5	1,300	7360429
	CA*F4860*6D*	D*97MC0804CNA*	41,000	31,400	14.0	11.5	1,300	7360428
	CA*F4860*6D*+EEP		41,000	31,400	13.0	11.0	1,400	6525719
	CA*F4860*6D*+MBVC1600**-1A*		41,000	31,400	14.0	11.5	1,400	6525721
	CA*F4860*6D*+TXV	D*80VC1005C*A*	40,500	32,000	14.0	11.5	1300	9948500
	CA*F4860*6D*+TXV	D*97MC1005CNA*	41,000	31,400	14.0	11.5	1,300	7360435
	CA*F4860*6D*+TXV	D*96VC1005CNA*	41,000	31,400	14.0	11.5	1,300	7360432
	CA*F4860*6D*+TXV	D*96VC1205DNA*	40,500	31,000	14.0	11.5	1,250	7360433
	CA*F4860*6D*+TXV	D*96VE1205DNA*	40,000	30,600	14.0	11.5	1,400	7367213
	CA*F4860*6D*+TXV	D*96VC0804CNA*	41,000	31,400	14.0	11.5	1,300	7360431
	CA*F4860*6D*+TXV	D*97MC0804CNA*	41,000	31,400	14.0	11.5	1,300	7360434
	CA*F4860*6D*+TXV	D*96VE1004CNA*	39,500	30,200	14.0	11.5	1,275	7367208
	CA*F4860*6D*+TXV	D*97MC1205DNA*	40,500	31,000	14.0	11.5	1,250	7360436
	CA*F4961*6D*+EEP		41,000	31,400	13.0	11.0	1,400	6525723
	CAPT4961*4A*	D*80VC1005C*A*	40,500	32,000	14.0	11.5	1300	9948501
	CAPT4961*4A*	DD80VC1005C*A*	41,000	31,400	14.0	12.0	1,405	6994131
	CAPT4961*4A*	D*80HE1005C*A*	41,000	31,400	14.0	12.0	1,300	6994117
	CAPT4961*4A*	D*96VC1205DNA*	40,500	31,000	14.0	11.5	1,250	7360439
	CAPT4961*4A*	D*80HE0603B*A*	41,000	31,400	13.5	11.5	1,355	6994115
	CAPT4961*4A*	D*96VE1205DNA*	40,500	31,000	14.0	11.5	1,400	7367214
	CAPT4961*4A*	D*80VC0805C*A*	41,000	31,400	14.0	12.0	1,380	6994130
	CAPT4961*4A*	D*80HE0805C*A*	41,000	31,400	14.0	12.0	1,350	6994116
	CAPT4961*4A*	D*96VC0804CNA*	41,000	31,400	14.0	11.5	1,300	7360437
	CAPT4961*4A*	D*96VC1005CNA*	41,000	31,400	14.0	11.5	1,300	7360438

See Notes on Page 45.

Outdoor Unit	Indoor Units		Cooling Ratings				CFM	AHRI #
		10.8 600	6524085	ACNF24	XX16D*	17,		
DX13SN 0421A* (cont.)	CAPT4961*4A*	D*96VE1004CNA*	39,500	30,200	14.0	11.5	1,275	7367209
	CAPT4961*4A*	D*97MC0804CNA*	41,000	31,400	14.0	11.5	1,300	7360440
	CAPT4961*4A*	D*97MC1005CNA*	41,000	31,400	14.0	11.5	1,300	7360441
	CAPT4961*4A*	D*97MC1205DNA*	40,500	31,000	14.0	11.5	1,250	7360442
	CAPT4961*4A*+EEP		40,500	31,000	13.0	11.0	1,400	6525725
	CAPT4961*4A*+MBVC1600**-1A*		41,000	31,400	14.0	11.5	1,375	6525727
	CAPT4961*4A*+MBVC2000**-1A*		41,000	31,400	14.0	11.5	1,400	6525729
	CHPF3642C6C*	D*80HE0805C*A*	40,000	30,600	13.0	11.3	1,350	6712156
	CHPF3642C6C*+EEP		39,000	30,600	13.0	11.0	1,075	6525731
	CHPF3642D6C*+EEP		40,000	30,600	13.0	11.0	1,400	6525733
	CHPF3743C6B*	D*80VC1005C*A*	40,000	31,600	13.5	11.2	1300	9948502
	CHPF3743C6B*	D*96VC0804CNA*	40,500	31,000	13.5	11.3	1,300	7360443
	CHPF3743C6B*	D*97MC1205DNA*	40,000	30,600	13.5	11.3	1,250	7360627
	CHPF3743C6B*	D*97MC0804CNA*	40,500	31,000	13.5	11.3	1,300	7360445
	CHPF3743C6B*	D*96VC1205DNA*	40,000	30,600	13.5	11.3	1,250	7360626
	CHPF3743C6B*	D*96VC1005CNA*	40,500	31,000	13.5	11.3	1,300	7360444
	CHPF3743C6B*	D*97MC1005CNA*	40,500	31,000	13.5	11.3	1,300	7360446
	CHPF3743C6B*+EEP		40,000	30,600	13.0	11.0	1,400	6525735
	CHPF3743C6B*+TXV	D*80VC1005C*A*	40,000	31,600	13.5	11.2	1300	9948503
	CHPF3743C6B*+TXV	D*97MC1005CNA*	40,500	31,000	14.0	11.5	1,300	7360450
	CHPF3743C6B*+TXV	D*97MC1205DNA*	40,000	30,600	14.0	11.5	1,250	7360629
	CHPF3743C6B*+TXV	D*96VC1005CNA*	40,500	31,000	14.0	11.5	1,300	7360448
	CHPF3743C6B*+TXV	D*96VC1205DNA*	40,000	30,600	14.0	11.5	1,250	7360628
	CHPF3743C6B*+TXV	D*96VC0804CNA*	40,500	31,000	14.0	11.5	1,300	7360447
	CHPF3743C6B*+TXV	D*97MC0804CNA*	40,500	31,000	14.0	11.5	1,300	7360449
	CHPF4860D6D*	D*80VC1005C*A*	40,500	32,000	14.0	11.5	1300	9948504
	CHPF4860D6D*	D*96VE1004CNA*	39,500	30,200	14.0	11.5	1,275	7367210
	CHPF4860D6D*	D*96VC1205DNA*	40,500	31,000	14.0	11.5	1,250	7360453
	CHPF4860D6D*	D*96VE1205DNA*	40,500	31,000	13.5	11.3	1,400	7367215
	CHPF4860D6D*	D*97MC0804CNA*	41,000	31,400	14.0	11.5	1,300	7360454
	CHPF4860D6D*	D*97MC1005CNA*	41,000	31,400	14.0	11.5	1,300	7360455
	CHPF4860D6D*	D*96VC1005CNA*	41,000	31,400	14.0	11.5	1,300	7360452
	CHPF4860D6D*	D*80HE0805C*A*	41,000	31,400	13.5	11.5	1,400	6712157
	CHPF4860D6D*	D*96VC0804CNA*	41,000	31,400	14.0	11.5	1,300	7360451
	CHPF4860D6D*	D*97MC1205DNA*	40,500	31,000	14.0	11.5	1,250	7360456
	CHPF4860D6D*+EEP		41,000	31,400	13.0	11.0	1,400	6525737
	CHPF4860D6D*+MBVC1600**-1A*		41,000	31,400	14.0	11.5	1,400	6525739
	CHPF4860D6D*+TXV	D*80VC1005C*A*	40,500	32,000	14.0	11.5	1300	9948505
	CHPF4860D6D*+TXV	D*97MC1005CNA*	41,000	31,400	14.0	11.5	1,300	7360461
	CHPF4860D6D*+TXV	D*96VC0804CNA*	41,000	31,400	14.0	11.5	1,300	7360457
	CHPF4860D6D*+TXV	D*97MC1205DNA*	40,500	31,000	14.0	11.5	1,250	7360462
	CHPF4860D6D*+TXV	D*96VC1205DNA*	40,500	31,000	14.0	11.5	1,250	7360459
	CHPF4860D6D*+TXV	D*96VE1205DNA*	40,500	31,000	14.0	11.5	1,400	7367216
	CHPF4860D6D*+TXV	D*97MC0804CNA*	41,000	31,400	14.0	11.5	1,300	7360460
	CHPF4860D6D*+TXV	D*96VE1004CNA*	39,500	30,200	14.0	11.5	1,275	7367211
	CHPF4860D6D*+TXV	D*96VC1005CNA*	41,000	31,400	14.0	11.5	1,300	7360458
	CSCF3642N6D*+EEP		40,000	30,600	13.0	11.0	1,325	6525741
	CSCF4860N6D*	D*80VC1005C*A*	41,000	32,400	13.5	11.5	1300	9948506
	CSCF4860N6D*	D*96VC0804CNA*	41,000	31,400	13.5	11.3	1,300	7360463
	CSCF4860N6D*	D*97MC1005CNA*	41,000	31,400	13.5	11.5	1,300	7360467

See Notes on Page 45.

Outdoor Unit	Indoor Units		Cooling Ratings				CFM	AHRI #
		10.8 600	6524085	ACNF24	XX16D*	17,		
DX13SN 0421A* (cont.)	CSCF4860N6D*	D*97MC0804CNA*	41,000	31,400	13.5	11.3	1,300	7360466
	CSCF4860N6D*	D*96VC1005CNA*	41,000	31,400	13.5	11.5	1,300	7360464
	CSCF4860N6D*	D*96VC1205DNA*	40,500	31,000	13.5	11.3	1,250	7360465
	CSCF4860N6D*	D*97MC1205DNA*	40,500	31,000	13.5	11.3	1,250	7360468
	CSCF4860N6D*+EEP		41,000	31,400	13.0	11.0	1,325	6525743
	CSCF4860N6D*+TXV	D*80VC1005C*A*	41,000	32,400	14.0	11.5	1300	9948507
	CSCF4860N6D*+TXV	D*96VC1205DNA*	40,500	31,000	14.0	11.5	1,250	7360471
	CSCF4860N6D*+TXV	D*97MC1205DNA*	40,500	31,000	14.0	11.5	1,250	7360474
	CSCF4860N6D*+TXV	D*97MC1005CNA*	41,000	31,400	14.0	11.5	1,300	7360473
	CSCF4860N6D*+TXV	D*97MC0804CNA*	41,000	31,400	14.0	11.5	1,300	7360472
	CSCF4860N6D*+TXV	D*96VC0804CNA*	41,000	31,400	14.0	11.5	1,300	7360469
	CSCF4860N6D*+TXV	D*96VC1005CNA*	41,000	31,400	14.0	11.5	1,300	7360470
	DV42PTCD14A*		40,500	31,000	14.0	12.0	1,495	6525709
	DV49PTCD14A*		41,000	31,400	14.0	12.0	1,320	8996426
	DV59PTCC14A*		40,000	30,600	14.0	12.0	1,290	8996424
	DV59PTCD14A*		40,500	31,000	14.0	12.0	1,365	8996425
DX13SN 0481A*	ARUF47D14A*		45,000	34,600	13.0	11.0	1,515	7988992
	ARUF48D14A*+TXV		44,500	34,200	13.0	11.0	1,550	6525822
	ARUF49D14A*		45,000	34,600	13.0	11.0	1,455	8171752
	ARUF60D14A*+TXV		44,500	34,200	13.0	11.0	1,460	6525826
	ASPT49D14A*		45,000	34,600	14.0	11.5	1,430	8245758
	AVPTC48C14A*		44,000	33,800	13.0	11.0	1,450	7080487
	AVPTC48D14A*		46,000	35,200	13.8	11.3	1,615	6525841
	CA*F4860*6D*+EEP		46,000	35,200	13.0	11.0	1,600	6525844
	CA*F4860*6D*+MBVC2000**-1A*		46,000	35,200	14.0	11.3	1,600	6525846
	CA*F4860*6D*+TXV	D*80HE0805C*A*	46,000	35,200	13.5	11.3	1,650	6712223
	CA*F4860*6D*+TXV	D*96VE1004CNA*	46,000	35,200	14.0	11.5	1,550	7367217
	CA*F4860*6D*+TXV	D*80HE1005C*A*	46,000	35,200	13.5	11.3	1,570	6712225
	CA*F4961*6D*	D*96VE1205DNA*	45,500	34,800	14.0	11.5	1,525	7367222
	CA*F4961*6D*+EEP		46,000	35,200	13.0	11.0	1,600	6525848
	CA*F4961*6D*+TXV	D*80VC1005C*A*	45,000	35,400	14.0	11.5	1600	9948508
	CA*F4961*6D*+TXV	D*97MC1205DNA*	46,000	35,200	14.0	11.5	1,575	7360480
	CA*F4961*6D*+TXV	D*96VC0804CNA*	45,000	34,600	14.0	11.5	1,585	7360475
	CA*F4961*6D*+TXV	D*96VC1205DNA*	46,000	35,200	14.0	11.5	1,575	7360477
	CA*F4961*6D*+TXV	D*96VE1004CNA*	46,000	35,200	14.0	11.5	1,550	7367218
	CA*F4961*6D*+TXV	D*97MC0804CNA*	45,000	34,600	14.0	11.5	1,585	7360478
	CA*F4961*6D*+TXV	D*96VE1205DNA*	46,000	35,200	14.0	11.5	1,525	7367223
	CA*F4961*6D*+TXV	D*96VC1005CNA*	45,000	34,600	14.0	11.5	1,520	7360476
	CA*F4961*6D*+TXV	D*97MC1005CNA*	45,000	34,600	14.0	11.5	1,520	7360479
	CAPT4961*4A*	D*80VC1005C*A*	47,000	37,000	13.5	11.5	1600	9948509
	CAPT4961*4A*	D*96VC1205DNA*	46,000	35,200	14.0	11.5	1,575	7360483
	CAPT4961*4A*	D*80HE1005C*A*	47,000	36,000	13.5	11.5	1,570	6994148
	CAPT4961*4A*	D*97MC1005CNA*	45,000	34,600	14.0	11.5	1,520	7360485
	CAPT4961*4A*	D*96VE1205DNA*	46,000	35,200	13.5	11.3	1,525	7367224
	CAPT4961*4A*	D*96VE1004CNA*	46,000	35,200	14.0	11.5	1,550	7367219
	CAPT4961*4A*	D*80HE0805C*A*	46,000	35,200	13.5	11.5	1,480	6994147
	CAPT4961*4A*	DD80VC0805C*A*	47,000	36,000	13.5	11.5	1,585	6994160
	CAPT4961*4A*	D*96VC0804CNA*	45,000	34,600	13.5	11.3	1,585	7360481
	CAPT4961*4A*	D*96VC1005CNA*	45,000	34,600	14.0	11.5	1,520	7360482
	CAPT4961*4A*	D*97MC1205DNA*	46,000	35,200	14.0	11.5	1,575	7360486

See Notes on Page 45.

Outdoor Unit	Indoor Units		Cooling Ratings				CFM	AHRI #
		10.8 600	6524085	ACNF24	XX16D*	17,		
DX13SN 0481A* (cont.)	CAPT4961*4A*	D*97MC0804CNA*	45,000	34,600	13.5	11.3	1,585	7360484
	CAPT4961*4A*	DD80VC1005C*A*	47,000	36,000	13.5	11.5	1,620	6994161
	CAPT4961*4A*+EEP		46,500	35,600	13.0	11.0	1,600	6525850
	CAPT4961*4A*+MBVC1600**-1A*		47,000	36,000	14.0	11.5	1,500	6525852
	CAPT4961*4A*+MBVC2000**-1A*		47,000	36,000	14.0	11.5	1,550	6525854
	CHPF4860D6D*	D*96VE1004CNA*	45,500	34,800	13.5	11.5	1,550	7367220
	CHPF4860D6D*	D*96VE1205DNA*	45,500	34,800	13.5	11.3	1,525	7367225
	CHPF4860D6D*+EEP		46,000	35,200	13.0	11.0	1,600	6525856
	CHPF4860D6D*+MBVC2000**-1A*		46,000	35,200	14.0	11.3	1,600	6525858
	CHPF4860D6D*+TXV	D*80VC1005C*A*	45,000	35,400	14.0	11.5	1600	9948510
	CHPF4860D6D*+TXV	D*96VC0804CNA*	45,000	34,600	14.0	11.5	1,585	7360487
	CHPF4860D6D*+TXV	D*96VC1205DNA*	46,000	35,200	14.0	11.5	1,575	7360489
	CHPF4860D6D*+TXV	D*96VC1005CNA*	45,000	34,600	14.0	11.5	1,520	7360488
	CHPF4860D6D*+TXV	D*80HE1005C*A*	46,000	35,200	13.5	11.3	1,570	6712226
	CHPF4860D6D*+TXV	D*96VE1004CNA*	45,500	34,800	14.0	11.5	1,550	7367221
	CHPF4860D6D*+TXV	D*80HE0805C*A*	46,000	35,200	13.5	11.3	1,650	6712224
	CHPF4860D6D*+TXV	D*96VE1205DNA*	45,500	34,800	14.0	11.5	1,525	7367226
	CHPF4860D6D*+TXV	D*97MC1205DNA*	46,000	35,200	14.0	11.5	1,575	7360492
	CHPF4860D6D*+TXV	D*97MC0804CNA*	45,000	34,600	14.0	11.5	1,585	7360490
	CHPF4860D6D*+TXV	D*97MC1005CNA*	45,000	34,600	14.0	11.5	1,520	7360491
	CSCF4860N6D*+EEP		46,000	35,200	13.0	11.0	1,600	6525860
	CSCF4860N6D*+TXV	D*80VC1005C*A*	44,500	35,000	14.0	11.5	1600	9948511
	CSCF4860N6D*+TXV	D*96VC0804CNA*	44,500	34,200	13.5	11.3	1,585	7360493
	CSCF4860N6D*+TXV	D*97MC0804CNA*	44,500	34,200	13.5	11.3	1,585	7360496
	CSCF4860N6D*+TXV	D*96VC1205DNA*	45,500	34,800	14.0	11.5	1,575	7360495
	CSCF4860N6D*+TXV	D*97MC1005CNA*	44,500	34,200	14.0	11.5	1,520	7360497
	CSCF4860N6D*+TXV	D*96VC1005CNA*	44,500	34,200	14.0	11.5	1,520	7360494
	CSCF4860N6D*+TXV	D*97MC1205DNA*	45,500	34,800	14.0	11.5	1,575	7360498
	DV48PTCD14A*		46,000	35,200	13.8	11.3	1,615	6525840
	DV59PTCC14A*		45,000	34,600	13.0	11.0	1,485	8996427
	DV59PTCD14A*		45,500	34,800	14.0	12.0	1,580	9000374
	DV61PTCD14A*		46,000	35,200	14.0	12.0	1,455	9000375
DX13SN 0601A*	AVPTC60D14A*		56,000	40,000	13.0	11.0	1,750	6525925
	CA*F4961*6D*+EEP		55,500	39,500	13.0	11.0	1,650	6525929
	CA*F4961*6D*+MBVC2000**-1A*		56,000	40,000	13.5	11.5	1,650	6525931
	CA*F4961*6D*+MBVC2000**-1A*+TXV		56,000	40,000	13.5	11.5	1,750	6525933
	CA*F4961*6D*+TXV	D*80VC0805D*A*	55,500	40,500	13.3	11.2	1650	9948512
	CA*F4961*6D*+TXV	D*80HE0805C*A*	54,500	38,500	13.3	11.2	1,650	6712281
	CA*F4961*6D*+TXV	D*80VC1005C*A*	55,500	39,500	13.3	11.2	1,700	6712290
	CA*F4961*6D*+TXV	D*97MC1005CNA*	54,000	38,500	13.0	11.0	1,600	7360503
	CA*F4961*6D*+TXV	D*97MC0804CNA*	54,000	38,500	13.5	11.0	1,585	7360502
	CA*F4961*6D*+TXV	D*80VC0805C*A*	55,500	39,500	13.3	11.2	1,700	6712287
	CA*F4961*6D*+TXV	D*96VE1205DNA*	56,500	40,000	13.0	11.0	1,950	7367227
	CA*F4961*6D*+TXV	D*96VC1005CNA*	54,000	38,500	13.0	11.0	1,600	7360500
	CA*F4961*6D*+TXV	D*97MC1205DNA*	54,000	38,500	13.5	11.5	1,585	7360504
	CA*F4961*6D*+TXV	D*96VC1205DNA*	54,000	38,500	13.5	11.5	1,585	7360501
	CA*F4961*6D*+TXV	D*96VC0804CNA*	54,000	38,500	13.5	11.0	1,585	7360499
	CA*F4961*6D*+TXV	D*80HE1005C*A*	55,000	39,000	13.3	11.2	1,720	6712284
	CAPT4961*4A*	D*80VC0805D*A*	55,500	40,500	13.0	11.0	1650	9948513

See Notes on Page 45.

Outdoor Unit	Indoor Units		Cooling Ratings				CFM	AHRI #
		10.8 600	6524085	ACNF24	XX16D*	17,		
DX13SN 0601A* (cont.)	CAPT4961*4A*	D*97MC0804CNA*	54,000	38,500	13.0	11.0	1,585	7360508
	CAPT4961*4A*	D*80VC1005C*A*	55,500	39,500	13.0	11.0	1,625	6712291
	CAPT4961*4A*	D*96VC0804CNA*	54,000	38,500	13.0	11.0	1,585	7360505
	CAPT4961*4A*	D*97MC1005CNA*	54,000	38,500	13.0	11.0	1,600	7360509
	CAPT4961*4A*	D*80VC0805C*A*	55,500	39,500	13.0	11.0	1,625	6712288
	CAPT4961*4A*	D*80HE1005C*A*	55,000	39,000	13.0	11.0	1,625	6712285
	CAPT4961*4A*	D*97MC1205DNA*	54,000	38,500	13.0	11.0	1,585	7360510
	CAPT4961*4A*	DD80VC0805C*A*	55,500	39,500	13.0	11.0	1,625	6526021
	CAPT4961*4A*	D*96VE1205DNA*	56,500	40,000	13.0	11.0	1,950	7367228
	CAPT4961*4A*	D*96VC1005CNA*	54,000	38,500	13.0	11.0	1,600	7360506
	CAPT4961*4A*	D*96VC1205DNA*	54,000	38,500	13.0	11.0	1,585	7360507
	CAPT4961*4A*	DD80VC1005C*A*	55,500	39,500	13.0	11.0	1,625	6526022
	CAPT4961*4A*	D*80HE0805C*A*	54,500	38,500	13.0	11.0	1,675	6712282
	CAPT4961*4A*+MBVC2000**-1A*		56,000	40,000	13.5	11.5	1,625	6525935
	CHPF4860D6D*+EEP+TXV		55,500	39,500	13.0	11.0	1,500	6525937
	CHPF4860D6D*+TXV	D*80VC0805D*A*	55,500	40,500	13.0	11.0	1650	9948514
	CHPF4860D6D*+TXV	D*96VE1205DNA*	56,500	40,000	13.0	11.0	1,950	7367229
	CHPF4860D6D*+TXV	D*80VC1005C*A*	55,500	39,500	13.0	11.0	1,800	6712292
	CHPF4860D6D*+TXV	D*97MC0804CNA*	54,000	38,500	13.5	11.0	1,585	7360514
	CHPF4860D6D*+TXV	D*80HE1005C*A*	55,000	39,000	13.3	11.2	1,720	6712286
	CHPF4860D6D*+TXV	D*96VC1205DNA*	54,000	38,500	13.5	11.5	1,585	7360513
	CHPF4860D6D*+TXV	D*97MC1005CNA*	54,000	38,500	13.0	11.0	1,600	7360515
	CHPF4860D6D*+TXV	D*97MC1205DNA*	54,000	38,500	13.5	11.5	1,585	7360516
	CHPF4860D6D*+TXV	D*96VC0804CNA*	54,000	38,500	13.5	11.0	1,585	7360511
	CHPF4860D6D*+TXV	D*80HE0805C*A*	54,500	38,500	13.3	11.2	1,650	6712283
	CHPF4860D6D*+TXV	D*96VC1005CNA*	54,000	38,500	13.0	11.0	1,600	7360512
	CHPF4860D6D*+TXV	D*80VC0805C*A*	55,500	39,500	13.0	11.0	1,800	6712289
	CSCF4860N6D*+EEP		54,000	38,500	13.0	11.0	1,600	6525939
	CSCF4860N6D*+MBVC2000**-1A*		53,500	38,000	13.5	11.5	1,650	6525941
	CSCF4860N6D*+TXV	D*80VC1005C*A*	54,000	39,500	13.0	11.0	1600	9948515
	CSCF4860N6D*+TXV	D*96VC1205DNA*	53,500	38,000	13.5	11.0	1,585	7360519
	CSCF4860N6D*+TXV	D*97MC1005CNA*	54,000	38,500	13.0	11.0	1,600	7360521
	CSCF4860N6D*+TXV	D*97MC0804CNA*	54,000	38,500	13.0	11.0	1,585	7360520
	CSCF4860N6D*+TXV	D*97MC1205DNA*	53,500	38,000	13.5	11.0	1,585	7360522
	CSCF4860N6D*+TXV	D*96VC1005CNA*	54,000	38,500	13.0	11.0	1,600	7360518
	CSCF4860N6D*+TXV	D*96VC0804CNA*	54,000	38,500	13.0	11.0	1,585	7360517
	DV59PTCD14A*		55,000	39,000	13.0	11.0	1,660	8996428
	DV60PTCD14A*		56,000	40,000	13.0	11.0	1,750	6525924
	DV61PTCD14A*		56,000	40,000	13.5	11.5	1,775	8996429
DX13SN 0611A*	ARUF61D14A*		55,500	38,000	13.0	11.0	1,520	7988993
	ASPT61D14A*		56,000	38,500	14.0	11.5	1,645	8245759
	AVPTC60D14A*		56,000	38,500	14.0	11.5	1,620	6526046
	CA*F4860*6D*+EEP		55,000	37,600	13.0	11.0	1,500	6526049
	CA*F4860*6D*+MBVC2000**-1A*		56,000	38,500	13.5	11.5	1,575	6526051
	CA*F4860*6D*+MBVC2000**-1A*+TXV		56,000	38,500	14.0	11.5	1,575	6526053
	CA*F4860*6D*+TXV	D*80VC0805D*A*	55,500	39,000	13.5	11.0	1500	9948516
	CA*F4860*6D*+TXV	DD80VC0805C*A*	55,500	38,000	13.0	11.0	1,500	6526357
	CA*F4860*6D*+TXV	D*80VC0805C*A*	55,500	38,000	13.5	11.0	1,520	6526294

See Notes on Page 45.

Outdoor Unit	Indoor Units		Cooling Ratings				CFM	AHRI #
		10.8 600	6524085	ACNF24	XX16D*	17,		
DX13SN 0611A* (cont.)	CA*F4860*6D*+TXV	D*80HE0805C*A*	55,500	38,000	13.0	11.0	1,550	6526284
	CA*F4860*6D*+TXV	DD80VC1005C*A*	55,500	38,000	13.0	11.0	1,550	6526360
	CA*F4860*6D*+TXV	D*80HE1005C*A*	55,000	37,600	13.5	11.0	1,525	6526289
	CA*F4860*6D*+TXV	D*80VC1005C*A*	55,500	38,000	13.5	11.0	1,520	6526299
	CA*F4961*6D*+EEP		56,500	38,500	13.0	11.0	1,500	6526055
	CA*F4961*6D*+MBVC2000**-1A*		57,000	39,000	14.0	11.5	1,575	6526057
	CA*F4961*6D*+MBVC2000**-1A*+TXV		57,000	39,000	14.0	12.0	1,575	6526059
	CA*F4961*6D*+TXV	D*80VC0805D*A*	56,500	40,000	14.0	11.5	1500	9948517
	CA*F4961*6D*+TXV	DD80VC0805C*A*	57,000	39,000	13.5	11.0	1,500	6526358
	CA*F4961*6D*+TXV	D*80HE1005C*A*	56,000	38,500	14.0	11.5	1,525	6526290
	CA*F4961*6D*+TXV	D*96VE1205DNA*	56,000	38,500	14.0	11.5	1,525	7367230
	CA*F4961*6D*+TXV	D*80HE0805C*A*	56,000	38,500	14.0	11.5	1,550	6526285
	CA*F4961*6D*+TXV	D*96VC1205DNA*	56,000	38,500	14.0	11.5	1,545	7360524
	CA*F4961*6D*+TXV	D*96VC1005CNA*	56,000	38,500	13.5	11.5	1,520	7360523
	CA*F4961*6D*+TXV	D*97MC1205DNA*	56,000	38,500	14.0	11.5	1,545	7360526
	CA*F4961*6D*+TXV	D*80VC1005C*A*	56,500	38,500	14.0	11.5	1,520	6526300
	CA*F4961*6D*+TXV	DD80VC1005C*A*	57,000	39,000	13.5	11.0	1,550	6526361
	CA*F4961*6D*+TXV	D*80VC0805C*A*	56,500	38,500	14.0	11.5	1,520	6526295
	CA*F4961*6D*+TXV	D*97MC1005CNA*	56,000	38,500	13.5	11.5	1,520	7360525
	CAPT4961*4A*	D*80VC0805D*A*	56,500	40,000	14.0	11.5	1500	9948518
	CAPT4961*4A*	D*97MC1205DNA*	56,000	38,500	13.5	11.5	1,545	7360530
	CAPT4961*4A*	D*80VC0805C*A*	56,500	38,500	14.0	11.5	1,520	6526296
	CAPT4961*4A*	D*80VC1005C*A*	56,500	38,500	14.0	11.5	1,520	6526301
	CAPT4961*4A*	DD80VC1005C*A*	57,000	39,000	13.5	11.0	1,550	6526362
	CAPT4961*4A*	D*80HE1005C*A*	56,000	38,500	14.0	11.5	1,525	6526291
	CAPT4961*4A*	D*96VE1205DNA*	56,000	38,500	13.5	11.5	1,525	7367231
	CAPT4961*4A*	D*96VC1205DNA*	56,000	38,500	13.5	11.5	1,545	7360528
	CAPT4961*4A*	D*96VC1005CNA*	56,000	38,500	13.5	11.0	1,520	7360527
	CAPT4961*4A*	D*97MC1005CNA*	56,000	38,500	13.5	11.0	1,520	7360529
	CAPT4961*4A*	DD80VC0805C*A*	57,000	39,000	13.5	11.0	1,500	6526359
	CAPT4961*4A*	D*80HE0805C*A*	56,000	38,500	14.0	11.5	1,550	6526286
	CAPT4961*4A*+EEP		56,500	38,500	13.5	11.0	1,500	6526061
	CAPT4961*4A*+MBVC1600**-1A*		57,000	39,000	13.5	11.5	1,560	6994355
	CAPT4961*4A*+MBVC2000**-1A*		57,000	39,000	14.0	12.0	1,575	6526063
	CHPF4860D6D*+EEP		56,000	38,500	13.0	11.0	1,500	6526065
	CHPF4860D6D*+MBVC2000**-1A*		57,000	39,000	14.0	11.5	1,575	6526067
	CHPF4860D6D*+MBVC2000**-1A*+TXV		57,000	39,000	14.0	11.5	1,575	6526069
	CHPF4860D6D*+TXV	D*80VC0805D*A*	56,000	39,500	14.0	11.5	1500	9948519
	CHPF4860D6D*+TXV	D*96VE1205DNA*	56,000	38,500	14.0	11.5	1,525	7367232
	CHPF4860D6D*+TXV	D*80HE1005C*A*	56,000	38,500	14.0	11.5	1,525	6526292
	CHPF4860D6D*+TXV	D*80VC1005C*A*	56,500	38,500	14.0	11.5	1,520	6526302
	CHPF4860D6D*+TXV	D*80VC0805C*A*	56,000	38,500	14.0	11.5	1,520	6526297
	CHPF4860D6D*+TXV	D*96VC1205DNA*	56,000	38,500	14.0	11.5	1,545	7360532
	CHPF4860D6D*+TXV	D*97MC1205DNA*	56,000	38,500	14.0	11.5	1,545	7360534
	CHPF4860D6D*+TXV	D*97MC1005CNA*	56,000	38,500	13.5	11.0	1,520	7360533
	CHPF4860D6D*+TXV	D*80HE0805C*A*	56,000	38,500	14.0	11.5	1,550	6526287
	CHPF4860D6D*+TXV	D*96VC1005CNA*	56,000	38,500	13.5	11.0	1,520	7360531
	CSCF4860N6D*+EEP		55,000	37,600	13.0	11.0	1,500	6526071
	CSCF4860N6D*+MBVC2000**-1A*		56,000	38,500	13.5	11.5	1,575	6526073

Outdoor Unit	Indoor Units		Cooling Ratings				CFM	AHRI #
		10.8 600	6524085	ACNF24	XX16D*	17,		
DX13SN 0611A* (cont.)	CSCF4860N6D*+MBVC2000**-1A*+TXV		56,000	38,500	14.0	11.5	1,575	6526075
	CSCF4860N6D*+TXV	D*80VC0805D*A*	56,500	40,000	13.5	11.5	1500	9948520
	CSCF4860N6D*+TXV	D*80HE0805C*A*	54,500	37,400	13.0	11.0	1,550	6526288
	CSCF4860N6D*+TXV	D*80VC0805C*A*	56,500	38,500	13.5	11.5	1,520	6526298
	CSCF4860N6D*+TXV	D*80VC1005C*A*	55,500	38,000	13.5	11.0	1,520	6526303
	CSCF4860N6D*+TXV	D*96VC1005CNA*	55,500	38,000	13.5	11.0	1,520	7360535
	CSCF4860N6D*+TXV	D*96VC1205DNA*	55,500	38,000	13.5	11.0	1,545	7360536
	CSCF4860N6D*+TXV	D*80HE1005C*A*	55,500	38,000	13.5	11.0	1,525	6526293
	CSCF4860N6D*+TXV	D*97MC1005CNA*	55,500	38,000	13.5	11.0	1,520	7360537
	CSCF4860N6D*+TXV	D*97MC1205DNA*	55,500	38,000	13.5	11.0	1,545	7360538
	DV59PTCD14A*		56,000	38,500	13.5	11.5	1,660	8996430
	DV60PTCD14A*		56,000	38,500	14.0	11.5	1,620	6526045
	DV61PTCD14A*		57,000	39,000	14.0	11.5	1,775	8996431

[1] BTU/h

[2] Seasonal Energy Efficiency Ratio; Certified per AHRI 210/240 @ 80°F/ 67°F/ 95°F

[3] Energy Efficiency Ratio @ 80°F/ 67°F/ 95°F

Notes

Always check the S&R plate for electrical data on the unit being installed.

When matching the outdoor unit to the indoor unit, use the piston supplied with the outdoor unit or that specified on the piston kit chart supplied with the indoor unit.

EEP - Order from Service Dept. Part No. B13707-38 or new Solid State Board B13707-35S. Part No. B13707-38 is not interchangeable with B13707-35S. The Daikin Gas Furnace contains the EEP cooling time delay.

MODEL	DIMENSIONS		
	W"	D"	H"
DX13SN0181A*	26	26	27½
DX13SN0241**	26	26	27½
DX13SN0301A*	26	26	27½
DX13SN0361A*	26	26	27½
DX13SN0421A*	29	29	36¼
DX13SN0481A*	29	29	36¼
DX13SN0601A*	29	29	40
DX13SN0611A*	35½	35½	38¼

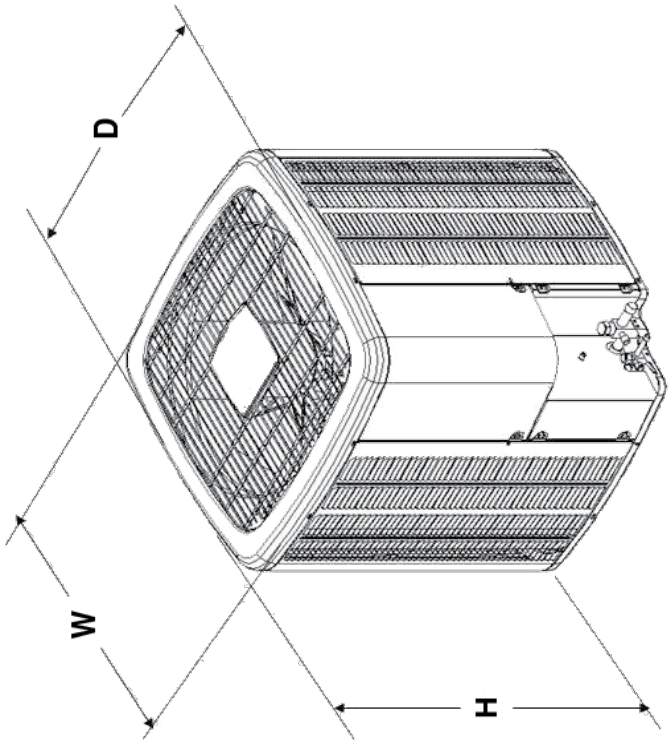

Daikin Manufacturing Company, L.P.

DX13SN

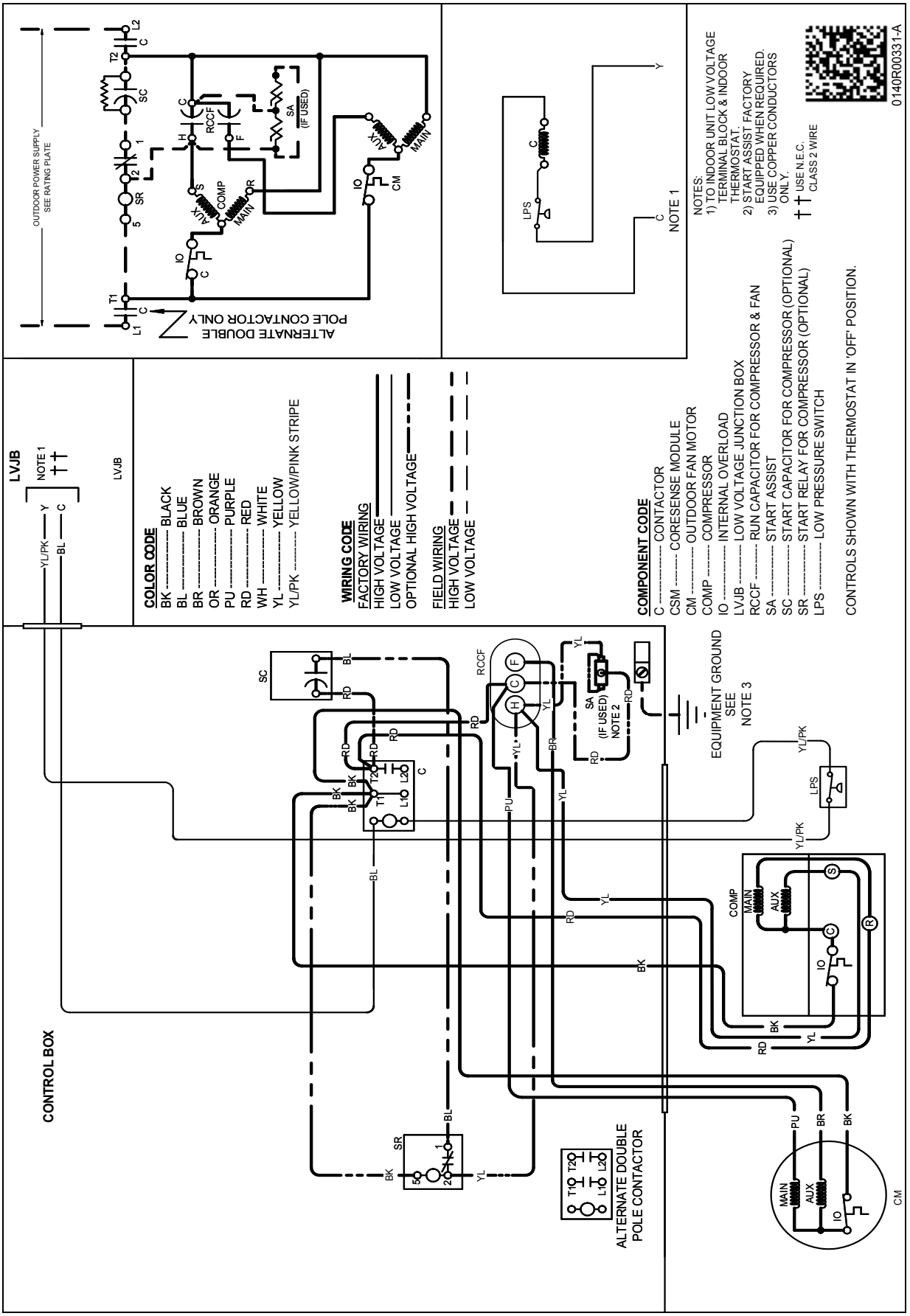

WARNING — ***High Voltage:*** Disconnect all power before servicing or installing this unit. Multiple power sources may be present. Failure to do so may cause property damage, personal injury, or death.

Wiring is subject to change. Always refer to the wiring diagram or the unit for the most up-to-date wiring.

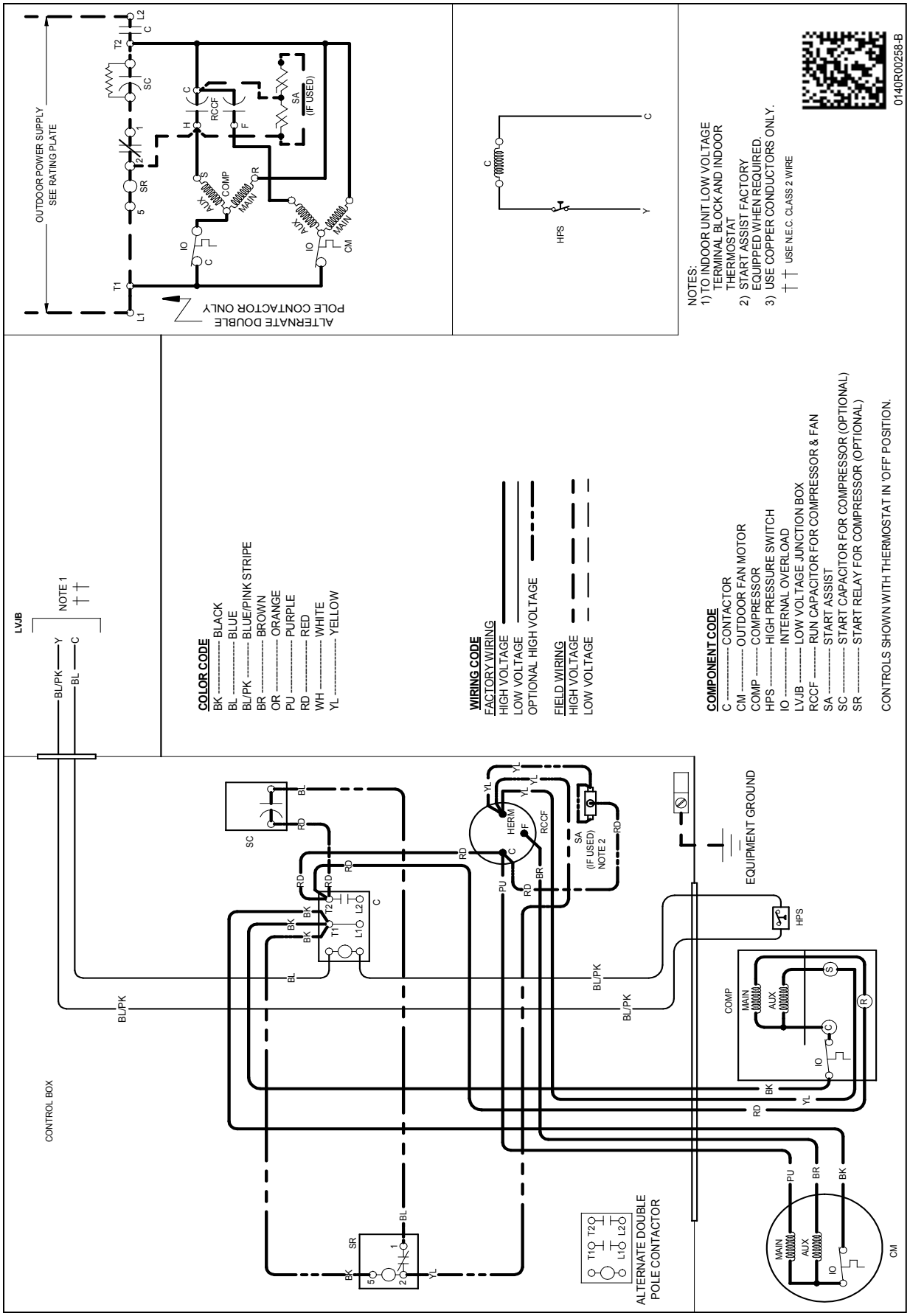

WARNING

High Voltage: Disconnect all power before servicing or installing this unit. Multiple power sources may be present. Failure to do so may cause property damage, personal injury, or death.

Wiring is subject to change. Always refer to the wiring diagram or the unit for the most up-to-date wiring.

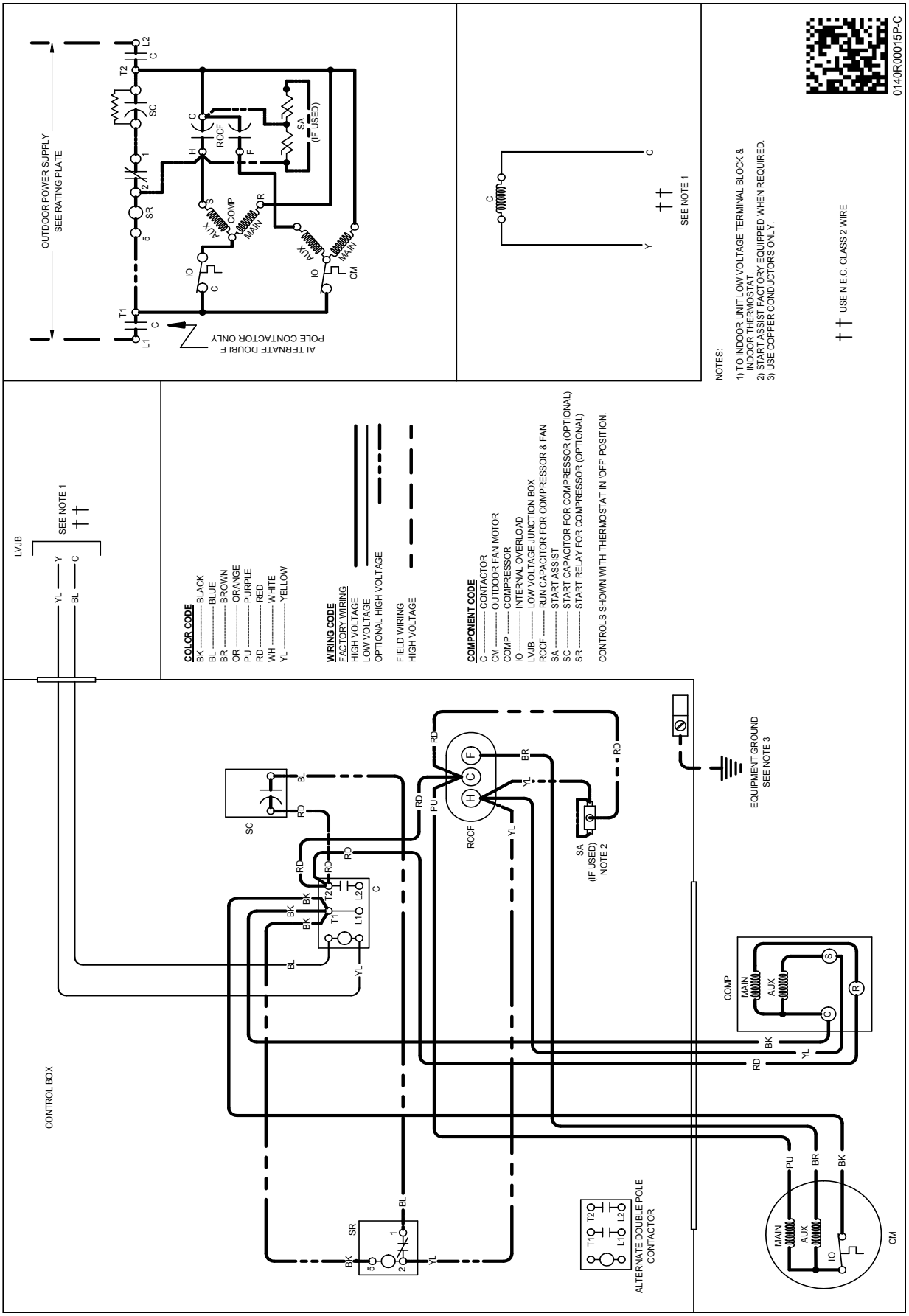

WARNING — ***High Voltage:*** Disconnect all power before servicing or installing this unit. Multiple power sources may be present. Failure to do so may cause property damage, personal injury, or death.

Wiring is subject to change. Always refer to the wiring diagram or the unit for the most up-to-date wiring.

MODEL	DESCRIPTION	DX13SN 018**	DX13SN 024**	DX13SN 030**	DX13SN 036**	DX13SN 042**	DX13SN 048**	DX13SN 060**	DX13SN 061**
ABK-20	Anchor Bracket Kit ^	X		X	X	X	X	X	X
ABK-21	Anchor Bracket Kit ^		X						
ASC-01	Anti-Short Cycle Kit	X	X	X	X	X	X	X	X
CSR-U-1	Hard-start Kit	X	X	X	X	X	X	X	X
CSR-U-2	Hard-start Kit								
CSR-U-3	Hard-start Kit								
FSK01A[1]	Freeze Protection Kit	X	X	X	X	X	X	X	X
LSK02A[2]	Liquid Line Solenoid Kit	X	X	X	X	X	X	X	X
TX2N4[2]	TXV Kit	X							
TX2N4A[2]	TXV Kit	X	X						
TX3N4[2]	TXV Kit			X	X				
TX5N4[2]	TXV Kit					X	X	X	X

^ Contains 20 brackets; four brackets needed to anchor unit to pad

[1] Installed on indoor coil

[2] Field-installed, non-bleed, expansion valve kit — Condensing units and heat pumps with reciprocating compressors require the use of start-assist components when used in conjunction with an indoor coil using a non-bleed thermal expansion valve refrigerant metering device or liquid line solenoid kit.

Our continuing commitment to quality products may mean a change in specifications without notice.
©2019 **DAIKIN MANUFACTURING COMPANY, L.P.** • Houston, Texas • Printed in the USA